SWIMMING POOL

INSIDE EQUIPMENTS

102 SK1MMERLER
102 Norm Skimmer
103 Standard skimmer,
104 Wide_ skimmer,
106 Filtered skimmer
107 Skimmer Accessories and Regulators

108 D1P FILTERS1 / GRIDS NORM
109 D1P FILTER1
110 Norm Bottom Filters Standard bottom
111 filters ABS bottom filters
112

114 STAINLESS STEEL DIP STRAINERS

115 STYLE bottom filters Round
bottom strainers

116 ABS A TRACES
116 Feeder
117 Pool bottom nozzle Vacuum nozzle
119

121 STAINLESS STEEL A TRACES

NORM skimmer 17.5L

NORM skimmer wide mouth

EXPLANATION

The 17.5 L capacity skimmer series is suitable for installation in public and private pools. It is manufactured from UV-protected ABS material and comes with a weir cover, flow regulator plug, cover height adjustment, and basket. The water inlet is 495 x 80 mm. The recommended flow rate is 7.5 m^{2}.3/h. Install skimmer every 25 m_2Water line surface area. 1 1/2 = and 2 = bottom connections, Ø 32 mm water overflow connection.

Compliant with standards
EN 16582-1
EN 16713-2

REINFORCED CONCRETE SWIMMING POOLS 1C1N

Norm 17.5L skimmer	Code	Standard PACKAGING	Standard Std Weight	Standard Volume m_3	Unit Price EURO
White	58707	1	5.61	0.182	180.00
Beige	58707CL090	1	5.61	0.182	185.00
Gray	58707CL129	1	5.61	0.182	185.00
Anthracite	58707CL144	1	5.61	0.182	185.00

FOR LINERS AND PREFABRICATED POOLS

Norm 17.5 liter skimmer	Code	Standard PACKAGING	Standard Std Weight	Standard Volume m3	Unit Price EURO
For liner pools, use flan_1. White	56176	1	5.61	0.182	245.00
Beige	56176CL090	1	5.61	0.182	265.00
Gray	56176CL129	1	5.61	0.182	265.00
Anthracite	56176CL144	1	5.61	0.182	265.00

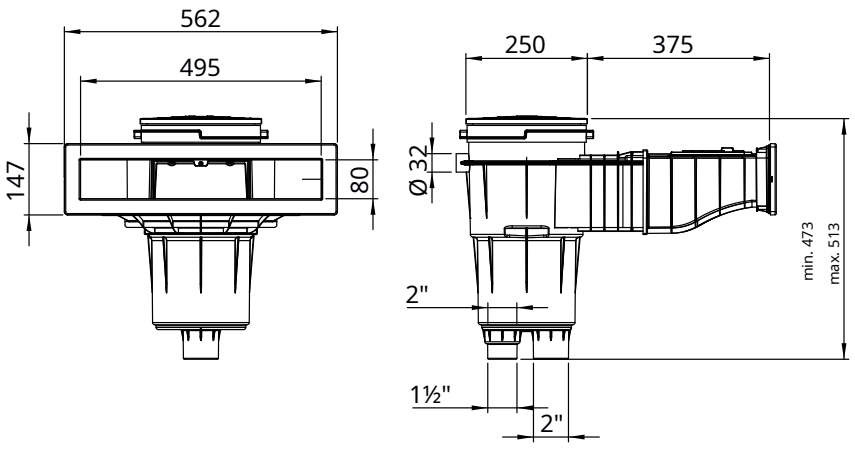

EN 16582-1
EN 16713-2
Compliant with standards1

15 L skimmers

- All skimmers in this series are resistant to UV rays.
- It is manufactured from ABS material and has a damper and flow regulator.
- The Emi_ ba lant1s1 bottom: 1 1/2" internal thread, 2" external thread.
- Pool bottom connection: Ø 50 mm adhesive.
- Ta_ma ba lant1s1: Ø 40 mm.
- Leaf catcher.
- Recommended flow rate: 7.5 m3/h.
- It is recommended to use 1 unit for every 25 m² of water surface area.

00249CL090

00249

00249CL144

00249CL129

EN 16582-1
EN 16713-2
Compliant with standards1

Skimmer standard mouth

REINFORCED CONCRETE SWIMMING POOLS 1C1N

	Code	Standard PACKAGING	Standard Std Weight	Standard Volume m3	Unit Price EURO
Round cap skimmer - WHITE Round cap skimmer - BEIGE Round cap skimmer - GR1 Round cap skimmer - ANTHRACITE	00249	1	2.95	0.059	80.00
	00249CL090	1	2.95	0.059	85.00
	00249CL129	1	2.95	0.059	85.00
	00249CL144	1	2.95	0.059	85.00
Square lid skimmer - WHITE	00250	1	3.15	0.059	82.00

00251CL090

00251

00251CL144

00251CL129

EN 16582-1
EN 16713-2
Compliant with standards1

Skimmer wide mouth

REINFORCED CONCRETE SWIMMING POOLS 1C1N

	Code	Standard PACKAGING	Standard Std Weight	Standard Volume m3	Unit Price EURO
Round cap skimmer - WHITE Round cap skimmer - BEIGE Round cap skimmer - GR1 Round cap skimmer - ANTHRACITE	00251	1	4.47	0.12	128.00
	00251CL090	1	4.47	0.12	135.00
	00251CL129	1	4.47	0.12	135.00
	00251CL144	1	4.47	0.12	135.00
Square lid skimmer - WHITE	00252	1	3.0	0.12	128.00

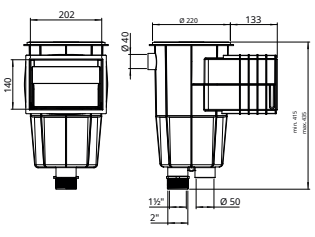

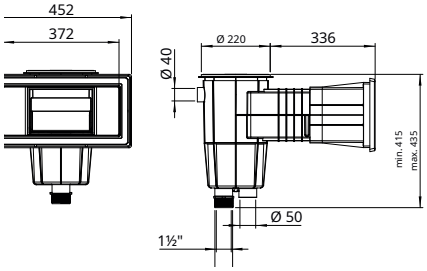

15 L skimmers

Skimmer large mouth

LINER POOLS 1 FOR 1

Adhesive gaskets are supplied along with the bolts and screws.

34413

Round lid White Color

34413CL09 **K0 are cover Standard - White Color**

34413CL129

34413CL144

Code	Standard PACKAGING	Standard Std Weight	Standard Volume m3	Unit Price EURO
01463	1	5.28	0.12	180.00
01464	1	5.28	0.12	190.00

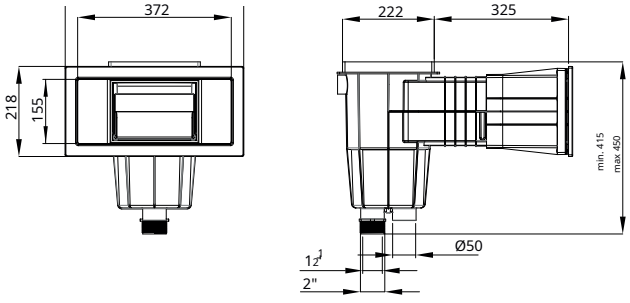

EN 16582-1
EN 16713-2
Compliant with standards

Skimmer standard mouth

LINER POOLS FOR

The adhesive gasket, double injection molded frame, jaws, and screws are included.

	Code	Standard PACKAGING	Standard Std Weight	Standard Volume m3	Unit Price EURO
Round lid - White Square	01461	1	4.0	0.059	165.00
lid - White	01462	1	4.0	0.059	165.00

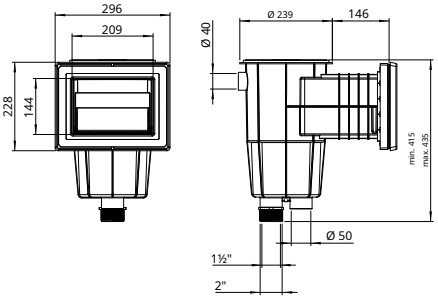

EN 16582-1
EN 16713-2
Compliant with standards

SLIM skimmer

SLIM: Stainless Steel Skimmer with High Water Level

REINFORCED CONCRETE SWIMMING POOLS 1C1N

The high-level skimmer allows for a high water level (+/- 4 cm) in the pool, creating an infinity pool effect. The water level is very close to the top of the pool. It is made entirely of AISI-316L. All models have a Ø50 mm overflow and a bay for mounting a water level regulator - (73453 - not included). It is also compatible with standard water levels on the market. It also includes adapters for prefabricated pools. Recommended flow rate 7.5 m3/h. Basket capacity 1.2L.

	Code	Standard PACKAGING	Standard Std Weight	Standard Volume m3	Unit Price EURO
Suction port width 500 mm	**73501**	1	14.80	0.136	**1,800.00**
Suction port width 650 mm	**73502**	1	15.20	0.169	**1,850.00**

EN 13451-1-3
Compliant with standards

EN 16582-1
EN 16713-2
Compliant with standards

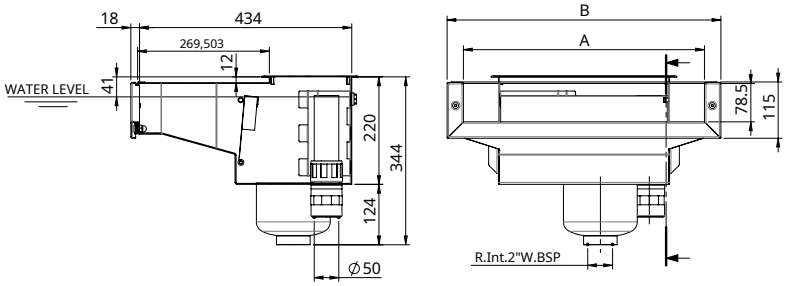

SLIM: A-500 & A-650

Stainless Steel Geni_ a 1zl1 skimmer

REINFORCED CONCRETE AND LINER POOLS 1C1N

Made of AISI-316L stainless steel. Includes Ø50mm overflow, basket and lid. Has a mounting slot for level control valve 73453 (see page 91). With grounding connection. Recommended flow rate 7.5 m^3/h. Products coded 56313 and 56316 include the awnings for prefabricated pools. 6° slope option available: 6° slope option is available for products coded 72744 and 72743. Water level +/- 8 cm. Basket capacity 1.2L

	Code	Standard PACKAGING	Standard Std Weight	Standard Volume m3	Unit Price EURO
Suction port width 500 mm	**56313**	1	14.84	0.136	**1,800.00**
Suction port width 650 mm	**56316**	1	15.84	0.136	**1,900.00**

Filtered skimmer

73158
73159
73160

73161
73162
73163

EN 16713-1
Compliant with standards

EN 16582-1
EN 16713-2
Compliant with standards

Filtered Skimmer

EXPLANATION

17.5 L skimmer with integrated cartridge system. Made of UV-resistant ABS. Includes lid, skimmer basket and 2 cartridge filters. Features Ø 32 mm top, Ø 63 mm bottom and Ø 50 mm side connections. The side connections are for suction nozzles.
Color change is possible with EASYCOLOR. This accessory can be attached without changing the skimmer nozzle.

REINFORCED CONCRETE SWIMMING POOLS 1C1N

	Code	Standard PACKAGING	Standard A 1rl1k kg	Standard Volume m3	Unit Price EURO
White					
Filtered skimmer with 2 cartridges, 16 m capacity.3	**73158**	1	12	0.32	**610.00**
Filtered skimmer with 2 cartridges, 20 m3.	**73161**	1	13	0.32	**640.00**

FOR LINERS AND PREFABRICATED POOLS

	Code	Standard PACKAGING	Standard Std Weight	Standard Volume m3	Unit Price EURO
White(1)					
Filtered skimmer with 2 cartridges, 16 m capacity.3	**73159**	1	12	0.32	**655.00**
Filtered skimmer with 2 cartridges, 20 m3.	**73162**	1	13	0.32	**700.00**
Cartridge 16 m³/h - 15 microns Cartridge 20 m3/h - 15 microns	**73164**	1	1.66	0.022	**175.00**
	71365	1	1.82	0.026	**215.00**

It can be complemented with EASYCOLOR colored caps, code 73166.

(1) Codes 73159 and 73162 will be delivered with 2 sets of screws – DIN 7982 A4 5.5x25 and 32.

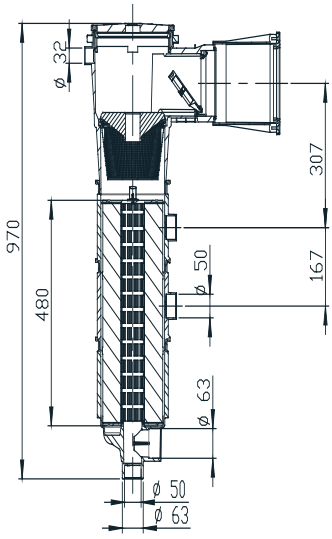

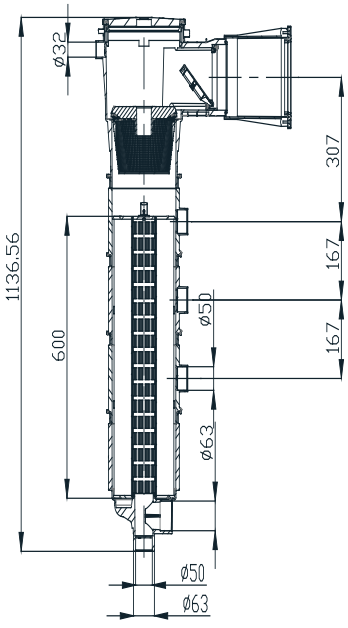

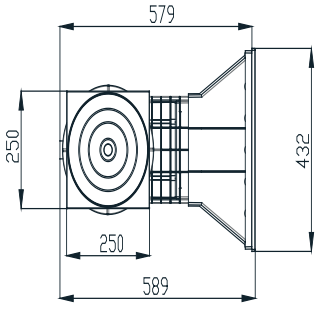

Level regulators

UNIK level sensor

FOR ALL POOL TYPES

UNIK skimmers feature an integrated, adjustable water level sensor with an ABS protective cover. The sensor level kit is located and secured in one corner of the skimmer. The user can adjust the water level along the height of the strainer opening (+/-70 mm). A 10-meter cable is included. The sensor level can regulate water level fluctuations by +/-10 mm.

	Code	Standard PACKAGING	Standard Std Weight	Standard Volume m3	Unit Price EURO
UNIK Level Sensor	**75973**	1	0.40	0.002	**235.00**

Water level regulator

FOR ALL POOL TYPES

Made of ABS. Can be attached from the bottom or side if required. Semi-mold cutouts for optimal pool connection. Adjustable cover height and level. For all types of skimmers. The cover color can be changed using the 15L skimmer colored covers on page 88: 00249-0700CL090, 00249-0700CL129, 00249-0700CL144.

Code	Standard PACKAGING	Standard Std Weight	Standard Volume m3	Unit Price EURO
15862	1	2.0	0.016	**110.00**

Level setting buoy

REINFORCED CONCRETE SWIMMING POOLS 1C1N

Model A-202 can be fitted to all stainless steel skimmers except 56313-56316-72743-72744-73501-73502. Adjustable opening. 3/8" connection.

Code	Standard PACKAGING	Standard A 1rl1k kg	Standard Volume m3	Unit Price EURO
00256	1	0.21	0.016	**50.00**

Level settingbuoy

REINFORCED CONCRETE SWIMMING POOLS 1C1N

Level regulator compatible with SLIM series stainless steel skimmers. Compatible with the following products: 56313, 56316, 72743, 72744, 73501, 73502. 3/8" side mount and adjustable float.

Code	Standard PACKAGING	Standard Std Weight	Standard Volume m3	Unit Price EURO
73453	1	0.9	0.008	**80.00**

Pool bottom suction information

EN 16713-02: 2016 - bottom suctions

POOL 1Q1 RISKS

How can it be prevented?

SWIMMING POOLS

ANTI-VORTEX COVER usage1m1

Pool ba_1na dip emi_ say1s1 :**1**. piece

Without using an anti-vortex lid.

dip emi_ler aras1,**minimum distance of 1 meter**And if either of the two main bottom drains is blocked, the remaining system**It must have the capacity to meet 100% of the flow rate.**

SWIMMING POOL

REFRESH

D1P EM1_ COMPLETE DE 1_1M

Product selection and i_imi**It is done according to the new rules.**

D1P EM1_ DE 1_1M1N1N CANNOT BE DONE I SITUATIONS

The current installed BUTTON SUCTİON **Compliance with the rules is ensured with the anti-vortex grid.**

GRILL DIMENSIONS

The calculation of bottom suction holes must conform to mathematical principles.

D1 ERLER1

To design a compatible bottom emi_i, it must be designed in accordance with EN standards.
For example, the grille design is very important to prevent human body limbs or hair from getting caught.

Maximum 0.5 m/s

Your pool has a Certificate of Conformity1 However,

it must meet all the requirements of standard1.

It can be given upon fulfillment!

* The anti-vortex plate is a special component fitted to the suction line to control turbulence in a flowing fluid. These plates prevent cavitation in the fluid according to UNE-EN 13451-3 by controlling the fluid velocity.

NORM bottom filters

- **All bottom filters are made of UV-resistant ABS.**
- **To prevent vacuum risks, use bottom filters that comply with local and international standards.**
- **Recommended usage: Maximum emission speed 0.5 m/s.**

56379

56379CL090

56379CL129

Also available in other colors.

NORM bottom filter

REINFORCED CONCRETE SWIMMING POOLS 1C1N

Suitable for private and public pools. Available in flat or anti-vortex grate types. Made of UV-resistant ABS material, with 2" side and 1 1/2" bottom connections.

	Code	Standard PACKAGING	Standard Std Weight	Standard Volume m3	Unit Price EURO
Antivortex 1grill1					
White	**56379**	4	10.60	0.069	**43.00**
Beige	**56379CL090**	4	10.60	0.069	**46.00**
Gray	**56379CL129**	4	10.60	0.069	**46.00**
Anthracite	**56379CL144**	4	10.60	0.069	**46.00**
Flat 1grill1					
White	**56378**	4	10.60	0.069	**42.00**
Beige	**56378CL090**	4	10.60	0.069	**45.00**
Gray	**56378CL129**	4	10.60	0.069	**45.00**
Anthracite	**56378CL144**	4	10.60	0.069	**45.00**

FOR LINER POOLS

56382CL090

56382

56382CL144

56382CL129

Complies with Standards
EN 13451-1
EN 13451-3

56380

	Code	Standard PACKAGING	Standard Std Weight	Standard Volume m3	Unit Price EURO
Antivortex Grille1					
White	56382	4	10.60	0.069	**80.00**
Beige	**56382CL090**	**4**	**10.60**	**0.069**	**83.00**
Gray	**56382CL129**	**4**	**10.60**	**0.069**	**83.00**
Anthracite	**56382CL144**	**4**	**10.60**	**0.069**	**83.00**
Flat grill					
White	**56380**	**4**	**10.60**	**0.069**	**80.00**
Beige	**56380CL090**	**4**	**10.60**	**0.069**	**83.00**
Gray	**56380CL129**	**4**	**10.60**	**0.069**	**83.00**
Anthracite	**56380CL144**	**4**	**10.60**	**0.069**	**83.00**

Standard bottom filters

Norm bottom filter

Berglas - 330 mm x 330 mm

EN 13451-1/3 2012
It conforms to Standard1.

EXPLANATION

Bottom strainers are made of fiberglass and resin. Adhesive-fitted connections. AISI-316L stainless steel grate. Minimum installation depth: 1.5 m. Recommended maximum suction. Velocity and flow rate: 0.5 m/s - 103 m3/h.

		Code	Standard PACKAGING	Standard Std Weight	Standard Volume m3	Unit Price EURO
Stainless steel grille AISI-316L						
Adhesive connection	**Emi_ flow rate**					
Ø 75 mm	15 m3/h	**20282N**	1	8	0.08	**650.00**
Ø 90 mm	23 m3/h	**20283N**	1	9	0.08	**660.00**
Ø 110 mm	27 m3/h	**20284N**	1	10	0.08	**670.00**

Norm bottom filter

Berglas - 507 mm x 507 mm

EN 13451-1/3 2012
It conforms to Standard1.

EXPLANATION

Bottom filters are made of fiberglass and resin. They have adhesive connections. Features an AISI-316L stainless steel grate. Minimum installation depth: 1.5 m. Recommended maximum suction speed and flow rate: 0.5 m/s - 103 m3/h.

		Code	Standard PACKAGING	Standard Std Weight	Standard Volume m3	Unit Price EURO
Stainless steel grille AISI-316L						
Adhesive connection	**Emi_ flow rate**					
Ø 110 mm	42 m3/h	**20285N**	1	16	0.23	**900.00**
Ø 125 mm	51 m3/h	**20286N**	1	17	0.23	**910.00**
Ø 140 mm	66 m3/h	**20287N**	1	18	0.23	**950.00**
Ø 160 mm	95 m3/h	**20288N**	1	19	0.23	**980.00**
Ø 200 mm	103 m3/h	**20289N**	1	20	0.23	**1,060.00**

Standard bottom strainer

Berglas - 330 mm x 330 mm

EXPLANATION

Gelcoat-coated bottom strainers are manufactured from fiberglass and resin. They feature adhesive connections. Recommended maximum suction flow rates according to EN 13451-1 standard are 16-43 m^3/h.

		Code	Standard PACKAGING	Standard Std Weight	Standard Volume m3	Unit Price EURO
Stainless steel grille (AISI-316-L) with grille holes <8mm						
GLUE CONNECTİON	**Emi_ flow rate**					
Ø 75 mm	16 m3/h	**20282**	1	5	0.047	**500.00**
Ø 90 mm	22 m3/h	**20283**	1	5	0.047	**510.00**
Ø 110 mm	33 m3/h	**20284**	1	5	0.047	**520.00**
UV resistant ABS grille With adhesive connection	**Emi_ flow rate**					
Ø 75 mm	16 m3/h	**22359**	1	4.5	0.034	**285.00**
Ø 90 mm	22 m3/h	**22360**	1	4.5	0.034	**300.00**
Ø 110 mm	33 m3/h	**22361**	1	4.5	0.034	**325.00**
Ø 125 mm	43 m3/h	**22362**	1	4.5	0.034	**340.00**

Standard bottom emi_ 1zgrilar1

Square grid with ABS frame.(private pools)

REINFORCED CONCRETE SWIMMING POOLS 1C1N

ØStainless steel and ABS plastic grille options are available; the carrier frame is made of ABS.

	Code	Standard PACKAGING	Standard A 1rl1k kg	Standard Volume m3	Unit Price EURO
Plastic grille 450 x 390 mm Plastic	**00283**	1	-	0.0540	**225.00**
grille 410 x 410 mm Plastic grille 252 x	**34333**	1	-	0.0540	**162.00**
252 mm Stainless steel grille 410 x 410	**34331**	1	-	0.0129	**100.00**
mm Stainless steel grille 252 x 252 mm	**34334**	1	-	0.0540	**485.00**
	34332	1	-	0.0129	**240.00**

Antivortex bottom strainer cover 1

Specially designed, smooth surface to prevent pool robots and cleaners from getting caught.
They are compatible with the 415 mm x 415 mm antivortex cover 1n1n (25344).

EN 13451-1-3
Compliant with Standard

Stainless Steel Grill	Code	Standard PACKAGING	Standard A 1rl1k	Standard Volume (m³)	Unit Price (EURO)
415x415	20282	1			500,,00
415x415	20283	1			512,,00
415x415	20284	1			520.00

ABS 1 grille	Code	Standard PACKAGING	Standard A 1rl1k	Standard Volume (m³)	Unit Price (EURO)
415x415	22359	1			285.00
415x415	22360	1			290.00
415x415	22361	1			325.00

Antivortex cover polyester bottom strainer

	Code	Standard PACKAGING	Standard Weight (kg)	Standard Volume (m³)	Unit Price EURO
415 mm	25344	1	1.25	0.012	360.00
	28556	1	4.00	0.032	580.00

Standard bottom filters

01467

01467CL090

01467CL129

01467CL144

Ø 210 mm bottom strainer

2" side outlet. ABS housing and grille. Comes with self-adhesive gaskets, bolts and screws. Recommended maximum flow rate: 13 m3/h (at 0.5 m/s suction speed)

Reinforced Concrete Pool	Code	Standard PACKAGING	Standard Weight 1ml1kg	Standard Volume m3B	Unit Price EURO
White	01467	4	2.8	0.055	27.00
Beige	01467CL090	4	2.8	0.055	28.00
Light Gray	01467CL129	4	2.8	0.055	28.00
Anthracite	01467CL144	4	2.8	0.055	28.00

EN 16582-1
Compliant with Standard1

00271

00271CL090

00271CL129

00271CL144

Liner Pool	Code	Standard PACKAGING	Standard Std Weight	Standard Volume m3	Unit Price EURO
White	00271	4	4.0	0.033	64.00
Beige	00271CL090	4	4.0	0.033	68.00
Gray	00271CL129	4	4.0	0.033	68.00
Anthracite	00271CL144	4	4.0	0.033	68.00

Ø 200 mm bottom strainer

EN 16582-1
Compliant with Standard1

Made from UV-resistant ABS material. Features 2" side and 1 1/2" bottom outlets. The bottom outlet is closed with a semi-cut socket that can be opened when needed. Max. flow rate: 13 m3/h.

Compliant with EN16582-1 and EN-16713 standards.

27839

27838

Reinforced Concrete Pool	Code	Standard PACKAGING	Standard A 1rl1k kg	Standard Volume m3	Unit Price EURO
Standard gear - White	**27839**	4	2.807	0.033	**26.00**

Liner Pool	Code	Standard PACKAGING	Standard Std Weight	Standard Volume m3	Unit Price EURO
Standard gear - White	**27838**	4	3.391	0.033	**54.00**

Ø 290 mm bottom strainer

EXPLANATION

290 mm bottom strainer, PARKER model, with 5 cm side outlet and 30 cm bottom outlet. Specifically designed for liner pools. Made entirely of white ABS material. Comes with stainless steel screws and synthetic adhesive gaskets. Side outlet plug for testing water tightness. Bottom outlet plug for installing hydrostatic valve (code 00277) and drain pipe (code 21581). Suction speed of 0.5 m/s. Recommended maximum flow rate: 13 m^{3}.3/h. Mounted flush with the pool bottom for total drainage. Complies with standards: EN 16582-1; EN 16713-2

Product	Lid	Code	Standard Packagingj	Standard a 1rl1k (kg)	Standard volume (m^3)	Unit Price EURO
For Liner Pools		00270	4	6	0.055	**72.00**

Square 210 mm x 210 mm bottom strainer

00258 - 00273

EN 16582-1
conforming to standard1

REINFORCED CONCRETE SWIMMING POOLS 1C1N

Square 2" outlet bottom strainer made of UV-resistant ABS. Maximum suction flow rate 13 m^3/h.

	Code	Standard PACKAGING	Standard Std Weight	Standard Volume m_3	Unit Price EURO
	00258	4	4.0	0.044	**30.00**
Square bottom suction_- Beige Square	00258CL090	4	4		
bottom suction_- Light gray Square	00258CL129	4	4		
bottom suction_- Anthracite	00258CL144	4	4		

LINER POOLS 1 FOR 1

UV-resistant 2" side outlet. Housing and grille made of UV-resistant ABS. Comes with self-adhesive gaskets, flanges and screws. Recommended maximum flow rate: 13 m3/h.

Code	Standard PACKAGING	Standard Std Weight	Standard Volume m_3	Unit Price EURO
00273	4	5.5	0.043	**78.00**

Ø 200 ABS Square bottom EMI-resistant - white

REINFORCED CONCRETE SWIMMING POOLS 1C1N

Grille made of Ø 200mm ABS, carrier frame made of ABS.

Code	Standard PACKAGING	Standard Std Weight	Standard Volume m_3	Unit Price EURO
00280	10	3.0	0.031	**15.00**

Norm buttom suction grill

74097 74097CL090

74097CL129 74097CL144

EN 16582-1
conforming to standard1

Complies with Apt. 4.4.1 b.2 of EN 16713-2:2017

SUITABLE FOR ALL POOL TYPES

A standard replacement grate for existing bottom filters in private pools, in accordance with pool regulations. Made from UV-resistant PP. Compatible with bottom filters 01467, 27837, and 27839. Complies with EN16582 and EN 16713 standards.

	Code	Standard PACKAGING	Standard Std Weight	Standard Volume m_3	Unit Price EURO
White	**74097**	6	3	0.033	**13.00**
Beige	**74097CL090**	6	3	0.033	**13.50**
Gray	**74097CL129**	6	3	0.033	**13.50**
Anthracite	**74097CL144**	6	3	0.033	**13.50**

Square grid with fiberglass frame

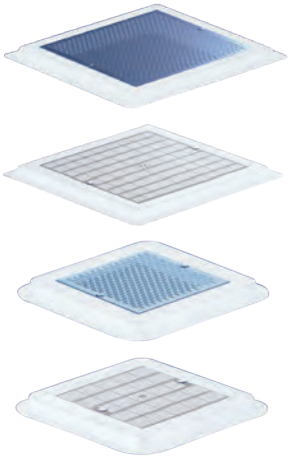

REINFORCED CONCRETE SWIMMING POOLS 1C1N

Available in stainless steel and ABS plastic grille options, the carrier frame is made of berglas resin. Compatible with antivortex covers coded 25344 and 28556.

	Code	Standard PACKAGING	Standard Std Weight	Standard Volume m_3	Unit Price EURO
Stainless steel grille					
490 mm x 490 mm	**28560**	1	5.0	0.029	**475.00**
345 mm x 345 mm	**28562**	1	3.0	0.029	**435.00**
Plastic grill					
490 mm x 490 mm	**28561**	1	4.7	0.029	**440.00**
345 mm x 345 mm	**28563**	1	2.9	0.029	**405.00**

STAINLESS STEEL DIP STRAINERS

75180, 75181
75184, 75185

STYLE bottom strainer

stainless steel. 2"connection1l1

EXPLANATION

Manufactured from AISI-316L grade stainless steel. This product series, featuring 2" side connections, offers flat/anti-vortex type grilles in square or round shape options.

Liner-compatible models come with gaskets, flanges, and screws.

Maximum flow rate: 13 m3/h

75182, 75183
751866, 75187

For Reinforced Concrete Pools	Code	Standard PACKAGING	Standard Std Weight	Standard Volume m3	Unit Price EURO
Round - Anti-vortex Grille	**75180**	1	3.97	0.026	**560.00**
Round - Flat Grille	**75181**	1	3.70	0.026	**460.00**
Square - Antivortex Grid	**75182**	1	4.20	0.026	**620.00**
Square - Flat Grid	**75183**	1	3.96	0.026	**485.00**

Round bottom strainer

2" connection stainless steel

UNE-EN 16582-1
UNE-EN-16713-2
It conforms to standards 1.

00268

26196

2" internal threaded connection. Made of AISI-316L stainless steel. Includes grate fixing screws. Maximum flow rate 13 m³/h.

For Reinforced Concrete Pools	Code	Standard PACKAGING	Standard Std Weight	Standard Volume m3	Unit Price EURO
2" Side connection	**00268**	1	2.56	0.02	**345.00**
2" side and 1½" bottom connection	**26196**	1	2.80	0.02	**640.00**

Square lid bottom filter

stainless steel 2" connection

REINFORCED CONCRETE SWIMMING POOLS 1C1N

Manufactured from AISI 316L stainless steel. Features a 1 1/2" threaded side outlet and an anti-vortex cover. Suitable for use in concrete pools and prefabricated pools with adapter code 00276. Maximum suction flow rate is 6 m³/h.

	Code	Standard PACKAGING	Standard Std Weight	Standard Volume m3	Unit Price EURO
2" Side connection	**00269**	1	1.14	0.01	**220.00**

EN 13451-1-3
Compliant with Standard1

EN 16582-1
EN 16713-2
Compliant with standards1

Ø 200 grill stainless steel

REINFORCED CONCRETE SWIMMING POOLS 1C1N

Ø 200 mm AISI-316 stainless steel grate, ABS frame. Maximum emission rate: 13 m3/h.

It complies with EN-13451/16582/16713.

	Code	Standard PACKAGING	Standard Std Weight	Standard Volume m3	Unit Price EURO
Ø 200 mm AISI-316 stainless steel bottom strainer	**00279**	10	6.0	0.02	**63.00**

Ø 300 dip buttom suction grillstainless steel

REINFORCED CONCRETE SWIMMING POOLS 1C1N

Ø 300 mm AISI-316 stainless steel grate, aluminum frame. Maximum discharge rate: 27 m3/h.

	Code	Standard PACKAGING	Standard kg	Standard Volume m3	Unit Price EURO
Ø 300 mm stainless steel bottom strainer	**00282**	4	5.8	0.02	**165.00**

Square bottom grilltainless steel

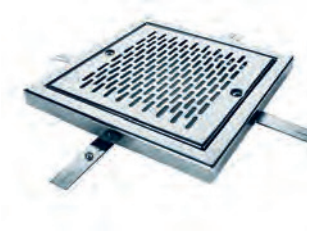

REINFORCED CONCRETE SWIMMING POOLS 1C1N

Designed for reinforced concrete pools. Support frame and grate made of polished stainless steel. Supplied with fixing screws. Other sizes available upon order.

		Code	Standard PACKAGING	Standard kg	Standard Volume m3	Unit Price EURO
AISI-304						
Dimensions (mm)	**Maximum recommended**					
200 x 200	**flow rate** 15 m3/h (0.5 m/s)	**00284**	1	1.2	0.01	**460.00**
300 x 300	43 m3/h (0.5 m/s) 83 m3/h	**00285**	1	2.2	0.01	**520.00**
400 x 400	(0.5 m/s) 136 m3/h (0.5 m/s)	**00286**	1	4.0	0.03	**580.00**
500 x 500		**00287**	1	4.5	0.04	**625.00**
AISI-316L						
Dimensions (mm)	**Maximum recommended**					
200 x 200	**flow rate** 15 m3/h (0.5 m/s)	**30764**	1	1.2	0.01	**510.00**
300 x 300	43 m3/h (0.5 m/s) 83 m3/h	**30765**	1	2.2	0.01	**540.00**
400 x 400	(0.5 m/s) 136 m3/h (0.5 m/s)	**30766**	1	4.0	0.03	**600.00**
500 x 500		**30767**	1	4.5	0.04	**685.00**

Antivortex 1 Grillestainless steel

REINFORCED CONCRETE SWIMMING POOLS 1C1N

This standard grate is for replacing the existing grates in private pools' old bottom filters, in accordance with pool regulations. It is made of AISI-316L. It is compatible with bottom filters 00268 and 26196.

It is compliant with EN-18582-1 and EN16713-2.

	Code	Standard PACKAGING	Standard kg	Standard Volume m3	Unit Price EURO
Antivorteks 1zgara is compatible with 00268-26196 bottom suction filters.	**74807**	1	0.8	0.017	**360.00**

Multi-ow feed openings

Multi-flow (different flow rate) system

- **The feed opening's eyeball is provided with a pre-marked range of diameters (14–20 and 25). One of the diameters can be cut during assembly using a punch (supplied with the opening).**
- **Maximum recommended flow rate at 4 m/s:**
  Ø 14 mm = 2.2 m3/h, Ø 20 mm = 4.5 m3/h, Ø 25 mm = 7 m3/hh

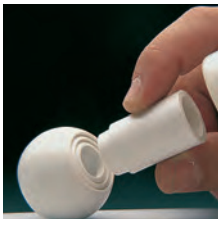
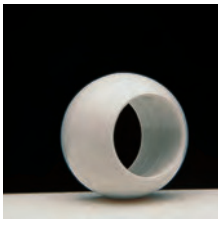

Ideal for pool renovation.

It is longer for bonding to the pipe and is specifically designed for replacing glued nozzles that do not require large holes (saving time and reducing potential damage to the pipe) or additional cutting or gluing. Its design allows for bonding to a pipe that is not flush with the pool wall.

Inside the pipe assembly

THE VIDEO
WATCH

Longer body

UNE-EN 16582-1
UNE-EN-16713-2

It complies with the standards.

Multiflow**feed**

76493

76493CL090

76493CL129

76493CL144

The Ø 50 mm pipe PN10 is glued to the wall. It is made of ABS. It is specially designed to save time and reduce the risk of replacing an existing wall nozzle; simply drill a small hole at the very beginning of the pipe, clean it, and glue the nozzle from the inside. It is made of UV-resistant ABS.

Concrete Pools	Code	Standard PACKAGING	Standard a 1rl1k kg	Standard volume (m3)	Unit price1 EURO
White	76493	16	3.62	0.020	15.00
Beige	76493CL090	16	3.62	0.020	17.00
Gray	76493CL129	16	3.62	0.020	17.00
Anthracite	76493CL144	16	3.62	0.020	17.00

Multiflow**five mouth threaded connection**

00295

00295CL090

00295CL129

00295CL144

D1_ 2" joint and Ø 50 mm inner wall to be bonded. Made of ABS. Concrete joints: codes 15658 and 15659.

recommended with

Concrete Pools	Code	Standard PACKAGING	Standard a 1rl1k kg	Standard volume (m3)	Unit price1 EURO
White	00295	24	4.35	0.020	14.00
Beige	00295CL090	24	4.35	0.020	15.00
Gray	00295CL129	24	4.35	0.020	15.00
Anthracite	00295CL144	24	4.35	0.020	15.00

00330

00330CL090

00330CL129

00330CL144

Multi owfeed

LINER POOLS 1 FOR 1

Ø 50 mm pipe PN10 d1_ will be glued to the wall. Made of ABS. It is specially designed to save time and reduce the risk of replacing an existing wall nozzle; simply drill a small hole at the very beginning of the pipe, clean it, and glue the nozzle from the inside. Made of UV-resistant ABS.

	Code	Standard Package	standard weight kg	Standard volume (m3)3	Unit price1 EURO
White	76494	-	-	0.020	35.00
Beige	76494CL090	-	-	0.020	42.00
Gray	76494CL129	-	-	0.020	42.00
Anthracite	76494CL144	-	-	0.020	42.00

UNE-EN 16582-1
UNE-EN-16713-2
It complies with the standards.

00298

00298CL090

00298CL129

00298CL144

CONCRETE POOLS FOR

Ø 63 mm PN 6 d1_ must be attached to the wall and Ø 50 mm inner wall. Made of ABS. Recommended for mounting with wall mounting pipe: code numbers 15661 and 15660.

	Code	Standard PACKAGING	Standard weight kg	Standard volume (m3)	Unit price1 EURO
White	00298	24	4.24	0.020	12.50
Beige	00298CL090	24	4.24	0.020	14.50
Light Gray	00298CL129	24	4.24	0.020	14.50
Anthracite Grey	00298CL144	24	4.24	0.020	14.50

Multi owfeed

For bonding to Ø 50 mm PN 10 pipe. Made of white ABS.

Reinforced Concrete Pool	Code	Standard PACKAGING	Standard weight kg	Standard Volume m3	Unit Price EURO
White	24413	40	4.0	0.020	**6.50**

UNE-EN 16582-1
UNE-EN-16713-2
It complies with the standards.

00330

00330CL090

00330CL129

00330CL144

Multi owfive mouth

FOR LINERS AND PREFABRICATED POOLS

2" d1_ threaded, Ø 50mm internal threaded connection. For liner pools, made of UV-resistant ABS. Supplied with gasket and screws.

	Code	Standard PACKAGING	Standard Weight kg	Standard Volume m3	Unit Price EURO
White	**00330**	12	4.5	0.020	**34.00**
Beige	**00330CL090**	12	4.5	0.020	**37.00**
Gray	**00330CL129**	12	4.5	0.020	**37.00**
Anthracite	**00330CL144**	12	4.5	0.020	**35.00**

Pool base nozzle (gluing)

00303

00303CL090

00303CL129

00303CL144

Complies with Standards
EN 16582-1
EN 16713-2

FOR REINFORCED CONCRETE SWIMMING POOLS

All-in-one return inlet and suction nozzle. Adjustable flow rate. Made of ABS plastic and stainless steel screws. Maximum recommended flow rate according to EN 13451-1 standard: 12 m3/h. Complies with EN-16582-1/ EN-16713-2.

	Code	Standard PACKAGING	Standard Weight kg	Standard volume m3	Unit price1 EURO
D1_ 2" di_, inner Ø 50 mm					
White	00303	24	5.0	0.020	16.00
Beige	00303CL090	24	5.0	0.020	17.00
Gray	00303CL129	24	5.0	0.020	17.00
Anthracite Grey	00303CL144	24	5.0	0.020	17.00
For mounting on Ø 63 mm PN 6, inner Ø 50 mm					
White	20140	20	4.4	0.021	16.00

Pool base nozzle (threaded)

00340

00340CL090

00340CL129

00340CL144

FOR REINFORCED CONCRETE SWIMMING POOLS

2" external thread and internal Ø 50 mm. Return nozzle. Comes with gasket, flange and screws. Adjustable flow rate. Maximum flow rate: 12 m3/h. Complies with EN-16582-1 / EN 16713-2.

	Code	Standard PACKAGING	Standard	Standard volume m3	Unit price1 EURO
White	00340	12	5.4	0.020	36.00
Beige	00340CL090	12	5.4	0.020	40.00
Gray	00340CL129	12	5.4	0.020	40.00
Anthracite Grey	00340CL144	12	5.4	0.020	40.00

Pool base nozzle(**articulated**)

22353

22353CL090

22353CL129

353CL144

FOR REINFORCED CONCRETE SWIMMING POOLS

Hinged body made of PVC. UV-resistant ABS cover. POM adjustment screw. Maximum flow rate m3/h. Compatible with Ø 75mm pipe and wall penetration element code 21248.

	Code	Standard PACKAGING	Standard a	Standard volume m3	Unit price1 EURO
White	22353	24	4.1	0.022	**35.00**
Beige	22353CL090	24	4.1	0.022	**36.00**
Gray	22353CL129	24	4.1	0.022	**36.00**
Anthracite Grey	22353CL144	24	4.1	0.022	**36.00**

Pool base nozzle 1 (**flow-controlled**)

08317

FOR REINFORCED CONCRETE SWIMMING POOLS

3" connection. Made of white ABS plastic. Suction. Comes with gasket, flange and screws for liner and prefabricated pools. Flow rate can be adjusted by rotating the grid. Suction surface area: 0.015 m2. External wall Ø 295 mm. Flow rate (0.4 m/s) 20 m3/h. Recommended maximum flow rate according to EN 13451-1 standard: 26 m3/h (0.5 m/s).

	Code	Standard PACKAGING	Standard	Standard volume m3	Unit price1 EURO
1 grille made of AISI-304 stainless steel, 1	08317	2	2.65	0.047	150.00
grille made of White ABS.	11796	2	2.65	0.047	48.00

Compliant with standards
EN 16582-1
EN 16713-2

11796

High-flow feed (vacuum) nozzle

FOR REINFORCED CONCRETE SWIMMING POOLS

Feeding nozzle that can also be used as emi_a 1z for high flow rate requirements. Maximum flow rate of 30 m3/h for a maximum flow velocity of 4 m/s. Maximum discharge rate of 5 m3/h for a maximum flow velocity of 0.5 m/s. Adhesive connection to Ø 75 or Ø 90mm pipe with PVC body. Can be used with concrete transition piece code 43590. The grate is adjustable in all directions.

Complies with Standards
EN 16582-1
EN 16713-2

	Code	Standard PACKAGING	Standard	Standard volume m3	Unit price1 EURO
White	41520	16	4.20	0.021	**35.00**

Vacuum Nozzle (Application)

00300

00300CL090

00300CL129

00300CL144

FOR REINFORCED CONCRETE SWIMMING POOLS

It should be fitted to Ø 63 mm and Ø 50 mm pipes. Maximum pressure: 6 bar. Made of ABS. 1 1/2" threaded plug. Recommended for installation with wall channels: code numbers 15661 and 15660.

UNE-EN 16582-1
UNE-EN-16713-2
It conforms to standards 1.

	Code	Standard PACKAGING	Standard	Standard volume m3	Unit price1 EURO
White	00300	24	3.62	0.020	**8.50**
Beige	00300CL090	24	3.62	0.020	**9.50**
Gray	00300CL129	24	3.62	0.020	**9.50**
Anthracite gray	00300CL144	24	3.62	0.020	**9.50**

Vacuum Nozzle (Threaded)

FOR REINFORCED CONCRETE SWIMMING POOLS

D1_ 2" threaded, Ø 50 mm inner wall. Maximum pressure: 6 bar. Made of white ABS with 1 1/2" threaded plug. Recommended for installation with wall channels (codes 15658 and 15659).

UNE-EN 16582-1
UNE-EN-16713-2
It conforms to standards 1.

	Code	Standard PACKAGING	Standard	Standard volume m3	Unit price1 EURO
White	00301	24	3.8	0.020	**9.50**

Vacuum Nozzle-(Threaded)

00332

00332CL090

00332CL129

00332CL144

FOR LINER POOLS

D1_ 2" threaded, inner Ø 50 mm. Made of white ABS. Comes with plug, gasket and screws. Recommended for installation with 15663 wall channel.

Compliant with standards
EN 16582-1
EN 16713-2

	Code	Standard PACKAGING	Standard	Standard volume m3	Unit price1 EURO
High flow rate be_ a 1zlar1					
White	00332	12	4.22	0.020	**32.00**
Beige	00332CL090	12	5.4	0.020	**35.00**
Gray	00332CL129	12	5.4	0.020	**35.00**
Anthracite	00332CL144	12	5.4	0.020	**35.00**

Vacuum Nozzle Installation(PN10)

FOR REINFORCED CONCRETE SWIMMING POOLS

To be fitted onto Ø 50 PN 10 pipe. Made of white ABS with an 1 1/2" threaded plug. For 07958 end connector and 01393 push-in connector. Recommended for installation with wall channels (codes 15658 and 15659).

Compliant with standards
EN 16582-1
EN 16713-2

	Code	Standard PACKAGING	Standard	Standard volume m3	Unit price1 EURO
White	24415	50	3.72	0.02	**6.50**

Savak Nozzle

FOR REINFORCED CONCRETE SWIMMING POOLS

It must be attached to a Ø 63 mm pipe. The body and grille are made of ABS plastic, and the screws are stainless steel. Wall mounting. Its features make this nozzle particularly suitable for overflow channels. Maximum flow rate: 4.5 m3/h.

	Code	Standard PACKAGING	Standard weight	Standard volume m3	Unit price1 EURO
White	00302	12	3.1	0.016	**12.00**

STAINLESS STEEL A TRACES

Flow rate adjustment base feed

EN 16582-1
EN 16713-2
conforming to standards

Manufactured from AISI-316 stainless steel. Top-mounted type for Ø 63 mm or Ø 50 mm pipes. Side water outlet.

	Code	Standard PACKAGING	Standard	Standard Volume m3	Unit Price EURO
For Ø 63 / Ø 50 mm pipes	**19678**	1	-	-	**190.00**
For Ø 75 / Ø 90 / Ø 110 mm pipes	**19679**	1	-	-	**240.00**

FLOW MOUTH

Manufactured from AISI-316L stainless steel. Features Ø 20 mm or Ø 25 mm spherical ends and 1 1/2" external threaded connections. If installed a maximum of 500 mm below the pool water level, the maximum recommended flow rate accord 16582-1 and EN 16713-2 standards is 4.5 m^3/h.

EN 16582-1
EN 16713-2
Compliant with standards1

Ø 20 mm sphere	Code	Standard PACKAGING	Standard	Standard Volume m3	Unit Price EURO
Length 35 mm	**32994**	1	0.3	0.001	**160.00**
Length 50 mm	**16325**	1	0.3	0.001	**165.00**
Length 70 mm	**16326**	1	0.3	0.001	**180.00**

Ø 25 mm sphere	Code	Standard PACKAGING	Standard weight	Standard Volume m3	Unit Price EURO
Length 35 mm	**69874**	1	0.3	0.001	**160.00**
Length 50 mm	**69875**	1	0.3	0.001	**165.00**
Length 70 mm	**69876**	1	0.3	0.001	**180.00**

Flow Mouth (adjustable)

Made of chrome-plated brass. The grill is made of AISI-304L stainless steel. Complies with standards: EN 13451-1-3, EN 16582-1, EN 16713-2, EN 13451-1-3

For Reinforced Concrete Pools	Code	Standard PACKAGING	Standard a 1rl1k (kg)	Standard volume (m^3)	Unit Price EURO
21 m3/h 2" inner thread 40 m3/	00312	22	12.85	0.044	**68.00**
h 3" internal tongue	00313	13	20	0.044	**118.00**

STYLE MOUTH

STYLE feed mouth

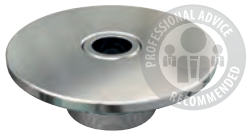

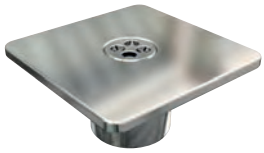

EN 16582-1
EN 16713-2
Compliant with standards1

REINFORCED CONCRETE SWIMMING POOLS 1C1N

A series of feeder outlets made of AISI-316L quality stainless steel, suitable for concrete and prefabricated* pools.
* STYLE feed inlets, together with the optional liner kit, are compatible with 1½" BSP threaded concrete transition pieces. They are compatible with replaceable existing feed inlets. Recommended maximum flow rate: 4 m/s.

- Ø20 mm: 4.5 m3/h *When installed a maximum of 500 mm below the water level according to EN standards.
- Ø25 mm: 7 m3/h
- 4 x Ø7.8 mm: 2.9 m3/h

	Code	Standard PACKAGING	Standard Std Weight	Standard Volume m3	Unit Price EURO
Round - Sphere 20mm - L35 mm Round - Sphere 20mm - L50 mm Round - Sphere 25mm - L35 mm Round - Sphere 25mm - L50 mm Round - Sphere 4x7.8mm - L35 mm Round - Sphere 4x7.8mm - L50 mm	**75164**	1	0.325	0.001	**102.00**
	75165	1	0.415	0.001	**110.00**
	75166	1	0.295	0.001	**105.00**
	75167	1	0.385	0.001	**115.00**
	75168	1	0.305	0.001	**116.00**
Square - Sphere 20mm - L35 mm	**75169**	1	0.395	0.001	**124.00**
Square - Sphere 20mm - L50 mm	**75170**	1	0.325	0.001	**96.00**
Square - Sphere 25mm - L35 mm	**75171**	1	0.415	0.001	**108.00**
Square - Sphere 25mm - L50 mm	**75172**	1	0.295	0.001	**101.00**
Liner adapter	**75173**	1	0.385	0.001	**115.00**
Liner adapter for existing mouth	**75178**	1	0.115	0.001	**46.00**
replacement.	**75179**	1	0.120	0.001	**46.00**

STYLE vacuum mouth

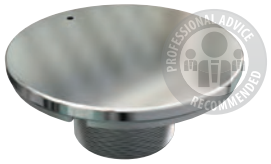

EN 16582-1
EN 16713-2
Compliant with standards1

REINFORCED CONCRETE SWIMMING POOLS 1C1N

Made of AISI-316L stainless steel, this vacuum nozzle product series is suitable for concrete and prefabricated pools and includes a liner kit and vacuum cap.

STYLE vacuum nozzles are compatible with 1½" BSP threaded concrete transition pieces.

It is compatible with existing interchangeable vacuum nozzles.

A snap-in connector 05684 is required.
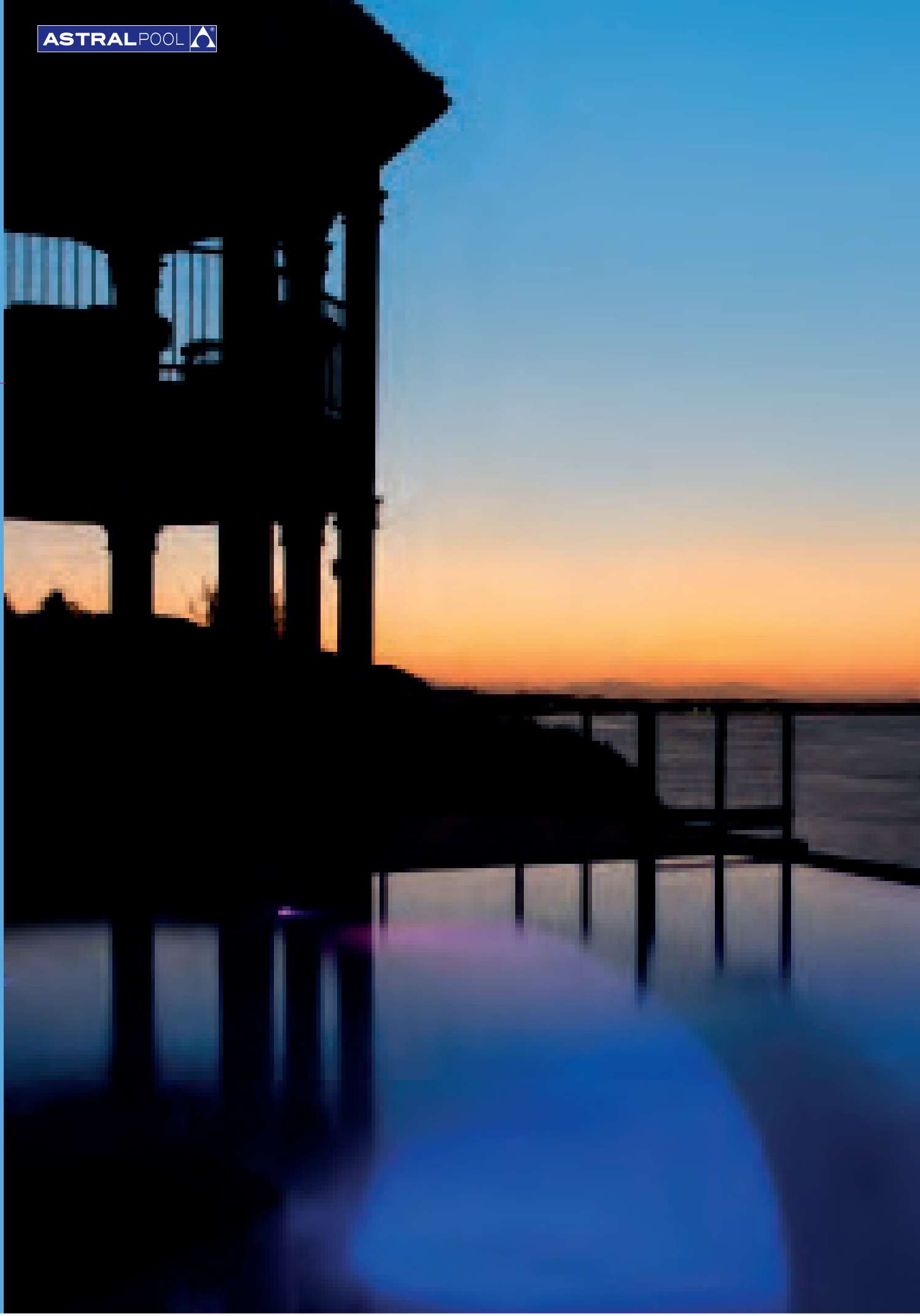
	Code	Standard PACKAGING	Standard Std Weight	Standard Volume m3	Unit Price EURO
Round - L35 mm	**75176**	1	0.34	0.001	**98.00**
Square - L35 mm	**75177**	1	0.35	0.001	**98.00**