PUMPS

194 PUMP SELECTION GUIDE

196 DE 1_KEN HIGH-SPEED PUMPS
197 Victoria Plus Silent VS
198 Verdon VS

199 SELF-EMBELLISHING PUMPS
199 Victoria Plus Silent
200 Verdon ES
201 Sena
202 Centrifuge PUMPS
202 Maxim
203 Kivu
205 Colorado
206 Aral Plus-C 3000
207 Aral Plus-C 1500

208 BLOWERS

208 BLOWER ACCESSORIES

209 CONTROL PANELS

212 CONTRE CURRENT SWIMMING EQUIPMENT - COMPONENTS

215 JET STREAM PUMPS

216 HIGH-SPEED PUMPS
220 FloPro™ETC
221 E30iQ1SINGLE SPEED PUMPS
223 FloPro™

226 iQ PUMPS

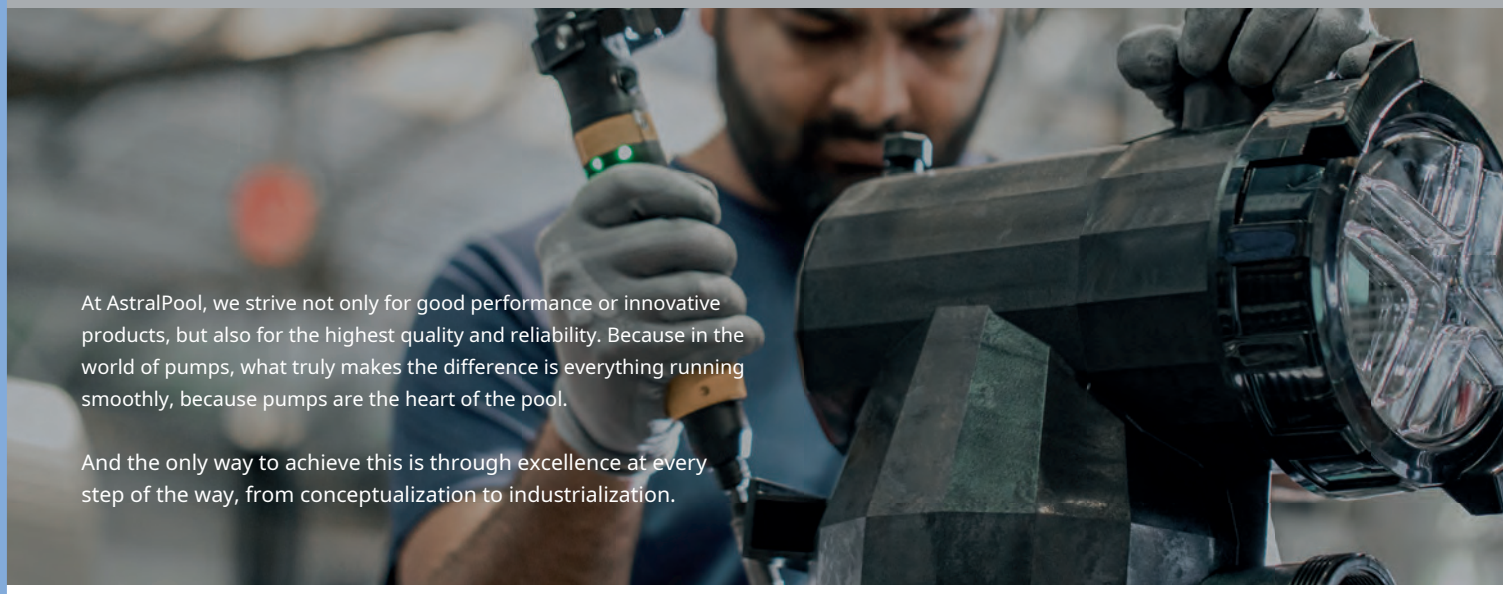

At AstralPool, we strive not only for good performance or innovative products, but also for the highest quality and reliability. Because in the world of pumps, what truly makes the difference is everything running smoothly, because pumps are the heart of the pool.

And the only way to achieve this is through excellence at every step of the way, from conceptualization to industrialization.

RELIABILITY IN DESIGN AND PRODUCTION

30 YEARS OF EXPERIENCE

At AstralPool, we have over 30 years of experience designing, producing, and controlling every aspect of the entire process in-house.

Our 5 R&D centers worldwide And**With our factories in Europe**
Because our customers deserve the best, we do our best to produce high-quality pumps.

Our expertise is in the pool industry.**More than 500,000 pumps per year**By producing, we have become one of the market leaders.

EUROPEAN ENGINEERING AND PRODUCTION

High-performance, reliable, and efficient pumps. We use cutting-edge technologies such as computer-aided design and engineering (CAD/CAE), and mechanical simulations (CFD/FEA) to deliver our services..

Our prototyping and industrialization processes, which lasted over a year, involved adjusting everything piece by piece, mold by mold, down to the finest detail.**all products are excellent in e_it degree**He guarantees us that it happened.

We ensure that the quality of our pumps meets our expectations in all processes. Therefore...**More than 500 R&D tests per year**And**Over 200 durability tests**We are developing with [the company/institution]. We also produce in our own factory. **100% of our pumps have ISO 9001 quality certification.**We are testing it with...

BEST IN ITS CLASS 1Y1 SERVICE1

Our dedicated team, committed sales team, detailed product training, extensive logistics network, and customer satisfaction-focused organization are here to provide efficient and close service to our customers at all times.

We have over 100 Fluidra Pro centers.and thanks to our direct presence in more than 35 countries**proximity, service, and flexibility**We are determined to save.

Want to learn more about AstralPool pumps? Scan this QR code and watch our video.

A WIDE RANGE OF PRODUCTS TO MEET EVERY NEED

Excellent energy savings while providing crystal clear clarity.
Sustainable solutions that provide water and silence.

Suitable for every pool, high performance and easy to use.
the widest that brings together
range of pumps

Suitable for small to medium-sized pools, can be used anywhere.
It is small in size as shown.

UNIQUE SERVICE A PRODUCT RANGE

Many iconic institutions around the world have trusted us with their pumps. We supply pumps for all types of systems: swimming pools, aquariums, wellness centers, spas, ornamental ponds, and lagoons.

Asian Games — INDONESIA

Newcastle Great Exhibition of the North — UNITED KINGDOM

PUMP SELECTION GUIDE

HOW DO YOU CHOOSE THE PUMP YOU NEED?

Choosing the right pump is crucial for operating a pool system.

The pump is the heart of a pool system and provides the power necessary for water circulation.

Its primary purpose is to filter water to ensure it is clean and fully recirculated. The main steps in selecting a pump are as follows:

- **The required flow rate should be adjusted according to the pool volume and dirt load. The flow rate should always be suitable for the installed filter. It is very important that it is neither too slow nor too fast.**
- **Adjusting the required pressure depending on the characteristics of the hydraulic system.**
- **Selecting the pump series that provides the required flow rate and pressure.**
- **Selecting a pump with the specifications best suited to the needs of a pool and its owner.**

Pumps also have other uses, such as massage jets. In such cases, read the specifications of each use and choose the correct pump.

Variable speed technology promises the highest level of comfort and features. It is the best choice for the most demanding users.

PUMP TYPES AND THEIR MAIN ADVANTAGES

To select the correct pump, you can use the table in a_a 1.

It displays the appropriate features according to the pool size.

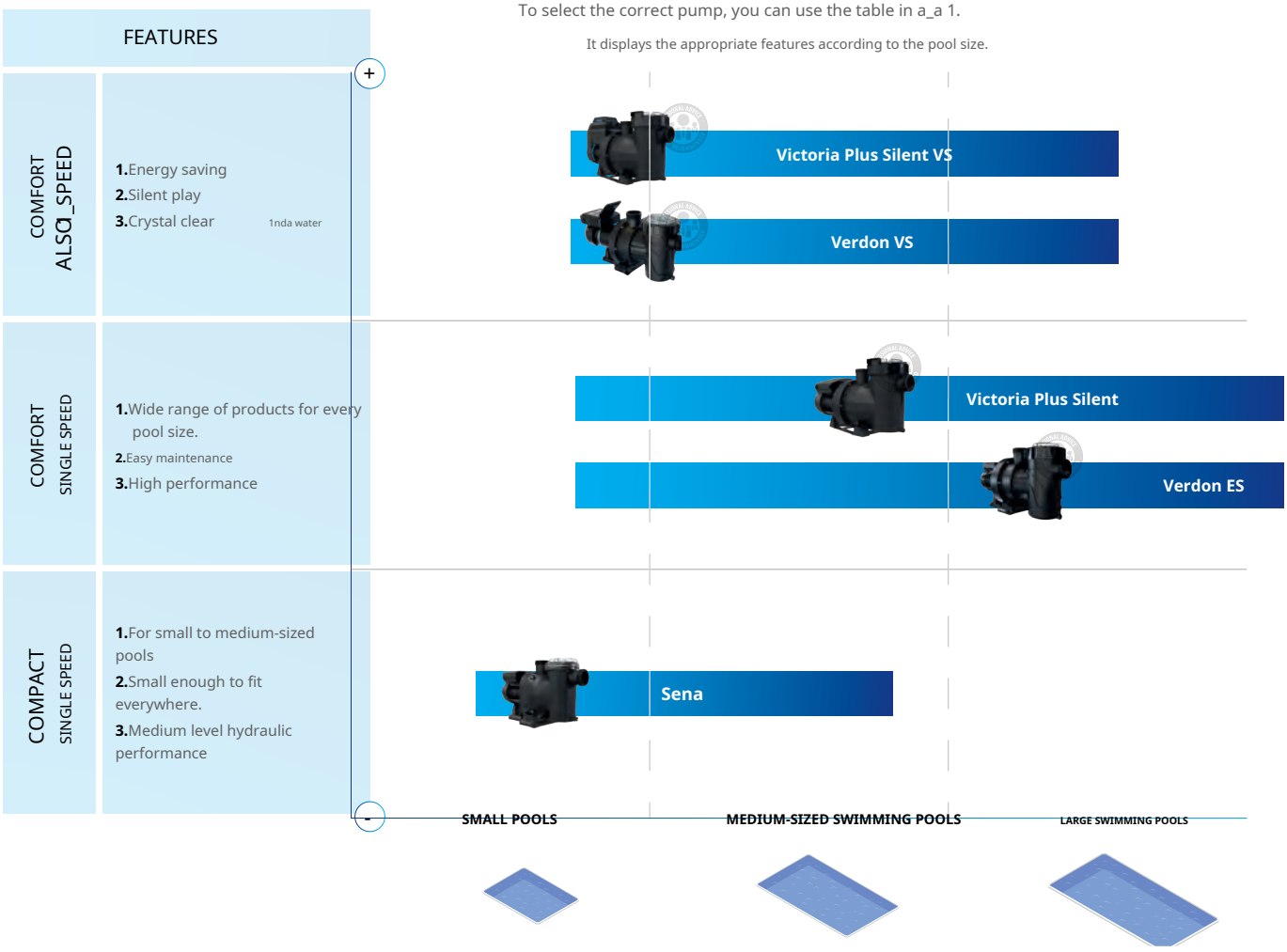

PUMP FEATURES AND SELECTION

	COMFORT VARIABLE		COMFORT SINGLE SPEED		COMPACT SINGLE SPEED
	VICTORIA PLUS SILENT VS	**VERDON VS**	**VICTORIA PLUS SILENT**	**VERDON ES**	**SENA**
Power range	1 HP - 2 HP	1 HP - 2 HP	0.5 HP - 3 HP	0.5 HP - 3 HP	0.33 HP - 1.25 HP
Flow rate range (m^3)₃/h)	17.0 - 26.0	15.5-25.0	7.5 - 35	7.0 - 31.0	4.5 - 17
Power supply	Single-phase	Single-phase	Single-phase or Three-phase	0.50-0.75 HP range1 1 Single-phase 1.0-3.0 HP range 1 Single-phase or Three-phase	0.33-0.50 HP range 1 1 Single-phase 0.75-1.25 HP range, Single-phase or Three-phase
Hydraulic connection	D50 to D63 or 2"	D50 or D63	D50 to D63 or 2"	D50 to D75	D50
Connectors (included)	Yes D50-D63 according to model power	Yes D50-D63 according to model power	Yes D50-D75 according to model power	Yes D50-D75 according to model power	Yes D50
Change compatibility	Victoria Plus*	ESPA Silen S2**	Victoria Plus*	ESPA Silen S2**	
Pre-filter capacity (l)	3	3	3	3	0.9
Productivity	★★★★★	★★★★★	★★★★★	★★★★★	★★★★★
Noise (dBA)	67-45	68-48	61	64	62
Control type	Ba 1ms1z Dry contacts Fluidra Connect remote control Automatic system	Ba 1ms1z Dry contacts FluidraPool	On/Off	On/Off	On/Off
Program settings	Hourly 3 speeds	Up to 8 pieces 3 speeds	- -	- -	- -
User interface	LCD display Removable interface	LCD screen	- -	- -	- -
Automation compatibility	Yes - Fluidra Connect	Yes Fluidra Pool	- -	- -	- -
Guarantee	3 YEAR GUARANTEE* (1)	3 YEAR GUARANTEE*	3+2 YEARS GUARANTEE (1)	3 YEAR GUARANTEE*	

Table of self-priming filtration pumps for residential swimming pools.

For details on backward compatibility across multiple compatibility ranges, refer to the product specifications, catalog, or website. Total efficiency (hydraulic power/electrical power consumed). Comparison is based on internal testing for the ranges shown in this table. Noise. Based on internal testing. 100M model for multiple power ranges.

10 mcw for speeds of kcal/kcal. For comfort ranges and 8 mcw for compact series.

* Full backward compatibility with pump-friendly installations.

*** These are third-party brands unrelated to Fluidra.

(1) Check the warranty extension conditions. Available in selected countries only.

VICTORIA PLUS
SILENT VS
PERFECT
VARIABLE HIGH-SPEED PUMP

ENERGY 1
SAVINGS

Victoria Plus Silent VS delivers more efficient performance while reducing electricity consumption by up to 85%(1).

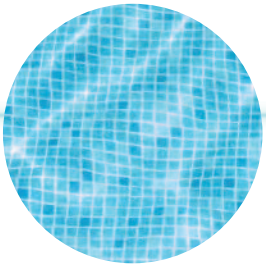

FILTRATIONAL TEST

Thanks to slower filtration, users will obtain crystal-clear water more quickly than with single-speed pumps.

PEACE AND CONVENIENCE TOGETHER

Pool users enjoy greater peace of mind thanks to the reduced noise level. The built-in control system and intuitive interface allow you to manage your pump with a single touch.

(1)Compared to the AstralPool Victoria Plus Silent single speed pump.

AstralPool Pumps

The heart of the perfect pool

ASTRALPOOL

VICTORIAPLUS SILENT VS

VARIABLE HIGH-SPEED PUMPS

Victoria Plus Silent VS

+ Excellent energy saving.
+ Maximum comfort
+ High filtration quality.

EXPLANATION

Victoria Plus Silent pumps are available in models designed for private pools, featuring variable speeds and automatic control with 1 HP or 2 HP motors. This pump is designed for use in newly constructed or existing pools. Thanks to its timer and variable speed control, it offers significant energy savings. This pump is compatible with the Fluidra Connect platform. It includes a built-in HIM controller, which can be wall-mounted for added convenience. Its low noise level ensures a more peaceful operating environment. It also features digital inputs and outputs for compatibility with devices such as salt electrolysis units and heat pumps.

	Code	Standard PACKAGING	Standard Weight	Standard Volume m3	Unit Price EURO
Victoria Plus Silent VS 100	**67547**	1	19	0.087	**1,660.00**
Victoria Plus Silent VS 200	**67548**	1	22	0.087	**2,060.00**

TECHNICAL SPECIFICATIONS

Code	Model	Voltage	Flow Rate H_N	Nominal Print height	Maximum Print Height	Maximum Flow	Engine Nominal C1k1_1	Maximum Abs. Power	connection
		U_N	Q_N	H_N	$H_{MAX.}$	$Q_{MAX.}$	P_{2N}	P_{1MAX}	D
		V	m3/h	m	m	m3/h	kW	kW	mm
67547	VS 100	230	17.0	10.0	16.0	23.5	0.75	1.12	D50
67548	VS 200	230	26.0	10.0	17.5	33.5	1.49	1.89	D63

	67547			67548		
	DU_UK	MIDDLE	HIGH	DU_UK	MIDDLE	HIGH
Speed (%)	1400	2100	2750	1400	2100	2750
Voltage (V)		230			230	
Frequency (Hz)		50			50	
Motor Nominal Output (kW)		0.75			1.49	
Maximum ABS Power (kW)	0.15	0.50	1.12	0.24	0.81	1.83
Capacity (m^3)3/h)	8.7	13.0	17.0	13.2	19.9	26.0
Differential height (m)	2.6	5.8	10.0	2.6	5.8	10.0
Max. Working pressure (m)	4.1	9.3	16.0	4.5	10.2	17.5
Noise (dBA)	45	58	63	48	58	67

COMPATIBLE NN thing

Fluidra Connect
Compatible

*Check the warranty extension terms. Only selected

It is available in these countries.

PERFORMANCE

67547

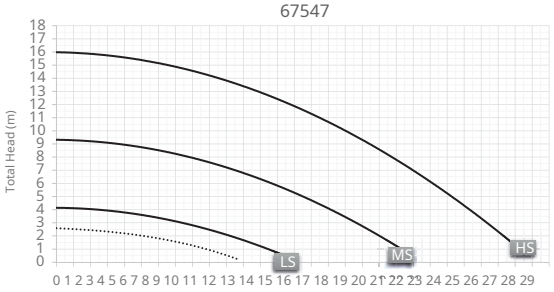

67548

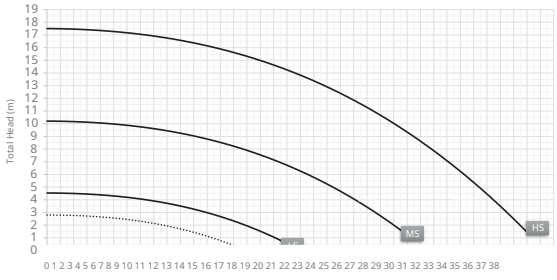

Menu settings1

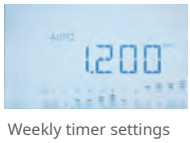

Weekly timer settings

Preset1 also i_ken
speeds

Power consumption and savings.
indicator

Installation and inspection:

Wall panel HMI via pump
HMI control system

VARIABLE HIGH-SPEED PUMPS

Verdon VS

+ Energy saving
+ Silent
+ Full control from anywhere, at all times.

EXPLANATION

Verdon VS is a series of self-priming pumps with an integrated frequency inverter, HMI, and Fluidra Pool application connection. It is designed and manufactured to deliver professional performance, ease of use and maintenance, reliability, and exceptional value for money.

	Code	Standard PACKAGING	Standard Weight	Standard Volume m3	Unit Price EURO
Verdon VS 100	75361	1	13.1	0.075	1,430.00
Verdon VS 200	75362	1	13.7	0.075	1,780.00

TECHNICAL SPECIFICATIONS

Code	Model	Voltage	Flow H_N	Nominal Print height	Maximum Print Height	Maximum Flow	Engine Nominal C1k1_1	Maximum Abs. Power	connection
		U_N	Q_N	H_N	$H_{MAX.}$	$Q_{MAX.}$	P_{2N}	P_{1MAX}	D
		V	m3/h	m	m	m3/h	kW	kW	mm
75361	VS 100	230	15.5	10.0	16.0	23.0	0.75	0.99	D50
75362	VS 200	230	25.0	10.0	17.0	32.5	1.49	1.59	D63

	75361			75362		
	DU_UK	MIDDLE	HIGH	DU_UK	MIDDLE	HIGH
Speed (%)	50	75	100	50	75	100
Voltage (V)	230			230		
Frequency (Hz)	50			50		
Motor Nominal Output (kW)	0.75			1.49		
Maximum ABS Power (kW)	0.17	0.47	0.99	0.24	0.73	1.59
Capacity (m^3)3/h)	7.9	11.8	15.5	12.7	19.1	25.0
Differential height (m)	2.6	5.8	10.0	2.6	5.8	10.0
Max. Working pressure (m)	4.1	9.3	16.0	4.4	9.9	17.0
Noise (dBA)	48	58	66	49	59	68

PERFORMANCE

75361

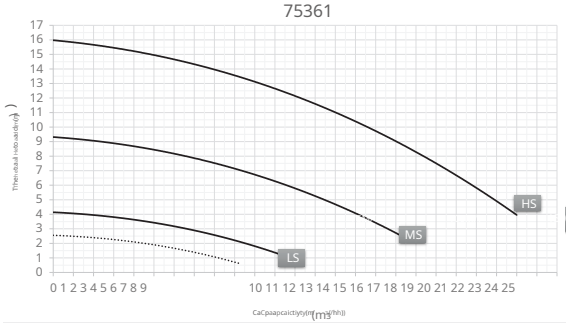

75362

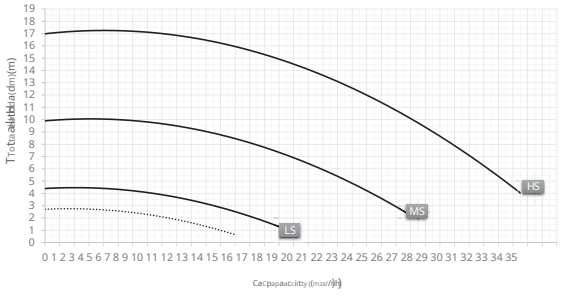

GARANTÍA 3 YEARS GUARANTEE

PRIMER SUMINISTRO TAVSIYESI

Energy Efficiency

Installation and inspection:

Pump
HMI on it
control system

FLUIDRA POOL

Fluidra Pool Application Control

Victoria Plus Silent

ASTRALPOOL

+ Long service life
+ Superior performance
+ Suitable for all pool types.

EXPLANATION

Self-priming pump with single-phase and three-phase motors. A pre-filter is installed in the pump housing to prevent foreign matter from entering and damaging the hydraulic system. The motors have IP-55 protection and are designed to withstand hot environments and high humidity levels. It has the GS quality mark. The key features of the Victoria Plus Silent are:

- Low noise level: between 61 dB and 70 dB.
- Easy to use: 2-arm pre-filter cover included (no wrench required).
- Compatibility: Fully compatible with Victoria Plus pumps.
- Geli_mi_ larger front bearing for axial thrust.
- PVC mounting accessories are included in the package.

	Code	Standard PACKAGING	Standard A 1rl1kkg	Standard Volume m3	Unit Price EURO
Victoria Plus Silent 75M	65560	1	13	0.07	610.00
Victoria Plus Silent 75T	65561	1	13	0.07	610.00
Victoria Plus Silent 100M	65562	1	14	0.07	635.00
Victoria Plus Silent 100T	65563	1	14	0.07	635.00
Victoria Plus Silent 150M	65564	1	17	0.07	715.00
Victoria Plus Silent 150T	65565	1	17	0.07	715.00
Victoria Plus Silent 200M	65566	1	18	0.07	730.00
Victoria Plus Silent 200T	65567	1	19	0.07	730.00
Victoria Plus Silent 300M	65569	1	23	0.07	850.00
Victoria Plus Silent 300T	65570	1	19	0.07	850.00

SELF-EMBELLISHING PUMPS

TECHNICAL SPECIFICATIONS

CODE	MODEL	Voltage	Flow Rate Hn	Print Height	Maximum Print Height	Maximum Flow Rate	Engine Nominal C1k1_1	Maximum Power Drawn	connection çap1
		UN	QN	HN	HMAX.	QMAX.	P2N	P1MAX	D
		V	m3/h	m	m	m3/h	kW	kW	mm
65560	75M	230	11	10	15	18	0.56	0.72	D50
65561	75T	230/400	11	10	15	18	0.56	0.72	D50
65562	100M	230	16	10	17	23.5	0.75	0.98	D50
65563	100T	230/400	16	10	17	23.5	0.75	1.02	D50
65564	150M	230	21.5	10	18	29	1.12	1.40	D63
65565	150T	230/400	21.5	10	18	29	1.12	1.40	D63
65566	200M	230	26	10	18	33.5	1.49	1.80	D63
65567	200T	230/400	26	10	18	33.5	1.49	1.80	D63
65569	300M	230	35	10	21	41	2.24	2.59	D75
65570	300T	230/400	35	10	21	41	2.24	2.40	D75

Maximum flow rate is taken at 4 mSS

PERFORMANCE

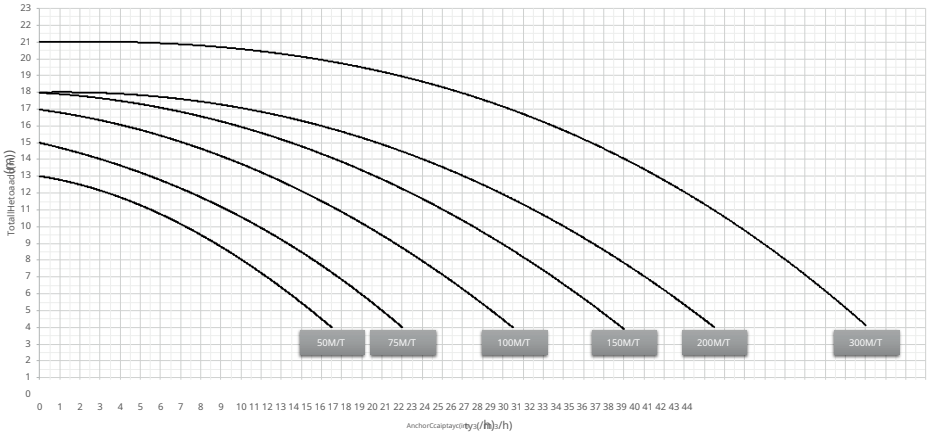

ASTRALPOOL

SELF-EMBELLISHING PUMPS

Verdon ES

+ Simple and reliable
+ Suitable for all pool types.
+ Easy maintenance

EXPLANATION

Designed and manufactured to provide a high-performance, reliable, and economical solution for professionals.

Verdon ES offers a wide range of models with 1/2 HP to 3/4 HP pumps in single-phase configurations and 1 HP to 3 HP pumps in both single-phase and three-phase configurations.

Thanks to its large pre-filter, it is easy to use and maintain. It is shipped with connection fittings to the pump.

	Code	Standard PACKAGING	Standard Weight	Standard Volume m3	Unit Price EURO
Verdon ES 50M	**73676**	1	12	0.07	**460.00**
Verdon ES 75M	**73678**	1	13	0.07	**465.00**
Verdon ES 100M	**73680**	1	14	0.07	**475.00**
Verdon ES 100T	**73681**	1	14	0.07	**475.00**
Verdon ES 150M	**73682**	1	17	0.07	**560.00**
Verdon ES 150T	**73683**	1	17	0.07	**560.00**
Verdon ES 200M	**73684**	1	18	0.07	**570.00**
Verdon ES 200T	**73685**	1	19	0.07	**570.00**
Verdon ES 300M	**73686**	1	23	0.07	**615.00**
Verdon ES 300T	**73687**	1	19	0.07	**615.00**

TECHNICAL SPECIFICATIONS

Code	MODEL	Voltage	Flow H_N	Print Height	Maximum Print Height	Maximum Flow Rate	Engine Nominal C1k1_1	Maximum Power Drawn	connection çap1
		U_N	Q_N	H_N	$H_{MAX.}$	$Q_{MAX.}$	P_{2N}	P_{1MAX}	D
		V	m3/h	m	m	m3/h	kW	kW	mm
73676	50M	230	7	10	13.5	14.5	0.38	0.56	D50
73678	75M	230	10.5	10	14	18	0.56	0.73	D50
73680	100M	230	15.5	10	16	23	0.75	0.96	D50
73681	100T	230/400	15.5	10	16	23	0.75	0.96	D50
73682	150M	230	20.5	10	16	28	1.12	1.42	D63
73683	150T	230/400	20.5	10	16	28	1.12	1.35	D63
73684	200M	230	25	10	17	32.5	1.49	1.85	D63
73685	200T	230/400	25	10	17	32.5	1.49	1.85	D63
73686	300M	230	31	10	18	39	2.24	2.56	D75
73687	300T	230/400	31	10	18	39	2.24	2.35	D75

The maximum flow rate is taken at 4 mSS.

PERFORMANCE

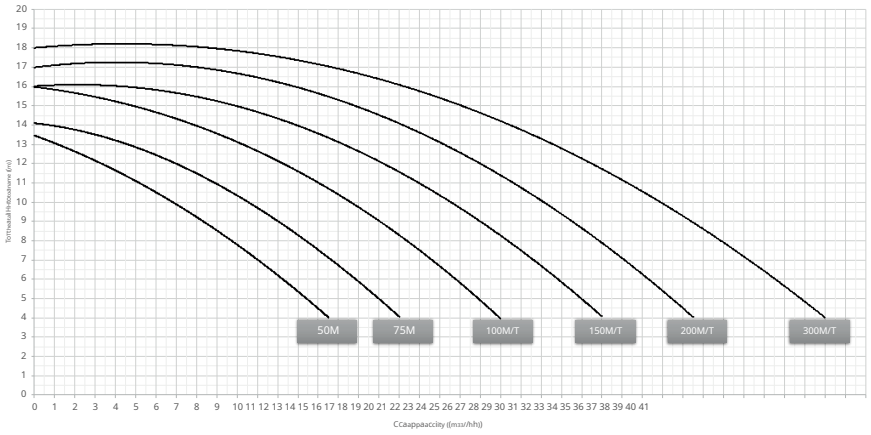

SELF-EMBELLISHING PUMPS

Sena

+ Simple and reliable
+ Small enough to fit everywhere.
+ For small and medium-sized pools

EXPLANATION

Compact self-priming pump with single-phase and three-phase motors. Has GS quality mark. IP-55 protection class, F class insulation and AISI-316 stainless steel for all components in direct contact with water.

	Code	Standard PACKAGING	Standard Weight	Standard Volume m3	Unit Price EURO
Sena 33M	**25461**	1	10.20	0.055	**465.00**
Sena 50M	**25462**	1	10.20	0.055	**475.00**
Sena 75M	**25463**	1	11.65	0.055	**485.00**
Sena 75T	**25464**	1	11.40	0.055	**490.00**
Sena 100M	**25465**	1	12.75	0.055	**515.00**
Sena 100T	**25466**	1	13.00	0.055	**515.00**
Sena 125M	**25467**	1	13.75	0.055	**525.00**
Sena 125T	**25468**	1	13.55	0.055	**545.00**

TECHNICAL SPECIFICATIONS

CODE	MODEL	Voltage	Flow H_N	Print Height	Maximum Print Height	Maximum Flow Rate	Engine Nominal C1k1_1	Maximum Power Drawn	connection çap1
		U_N	Q_N	H_N	$H_{MAX.}$	$Q_{MAX.}$	P_{2N}	P_{1MAX}	D
		V	m3/h	m	m	m3/h	kW	kW	mm
25461	33M	230	3.5	8.0	9.0	9.3	0.25	0.46	D50
25462	50M	230	7.5	8.0	11.0	12.0	0.38	0.61	D50
25463	75M	230	11.2	8.0	13.0	15.3	0.56	0.91	D50
25464	75T	230/400	11.2	8.0	13.0	15.3	0.56	0.91	D50
25465	100M	230	13.8	8.0	14.5	17.3	0.75	1.14	D50
25466	100T	230/400	13.8	8.0	14.5	17.3	0.75	1.14	D50
25467	125M	230	16.0	8.0	16.5	19.5	0.94	1.19	D50
25468	125T	230/400	16.0	8.0	16.5	19.5	0.94	1.19	D50

The maximum flow rate is taken at 4 mSS.

PERFORMANCE

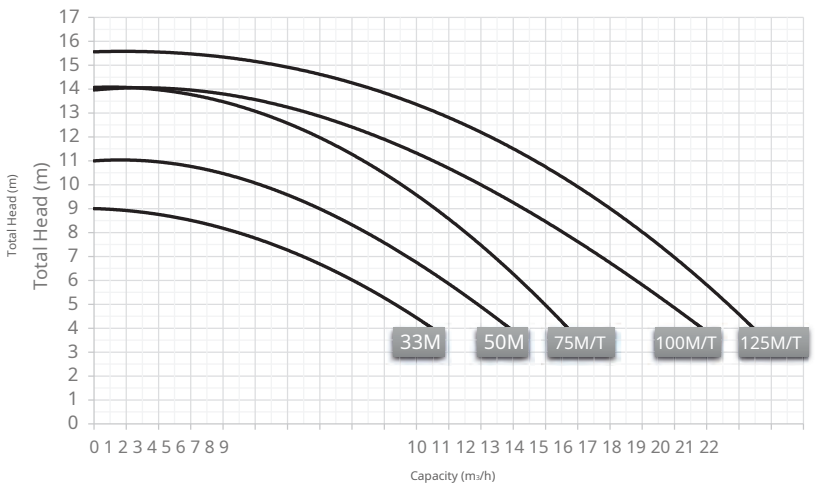

CENTRIFUGAL PUMPS

Maxim

EXPLANATION

The pump body is made of plastic, and the pump shaft is made of AISI-316 steel. The front filter basket has a capacity of 8 liters. The filter cover is attached. Self-sealing up to 1.5 m. 2860 rpm.

	Code	Standard PACKAGING	Standard Weight	Standard Volume m3	Unit Price EURO
Maximum 3.5 HP	**08003**	1	32	0.184	**1,600.00**
Maximum 4.5 HP	**08004**	1	34	0.184	**2,100.00**
Maximum 5.5 HP	**08005**	1	37	0.184	**2,175.00**

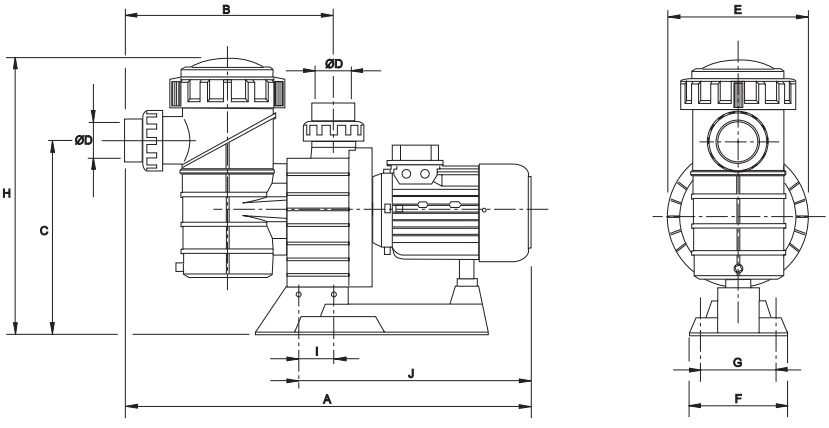

TECHNICAL SPECIFICATIONS

Code	Strength	connection	Voltage	mSS 8	10	12	14	16	19.5
				m3/h					
08003	3.5 HP	3" threaded connection1	230/400 V III	56	50	42	34	23	0
08004	4.5 HP		230/400 V III	74	66	57	46	30	0
08005	5.5 HP		230/400 V III	88	78	67	53	34	0

PERFORMANCE E R1LER1

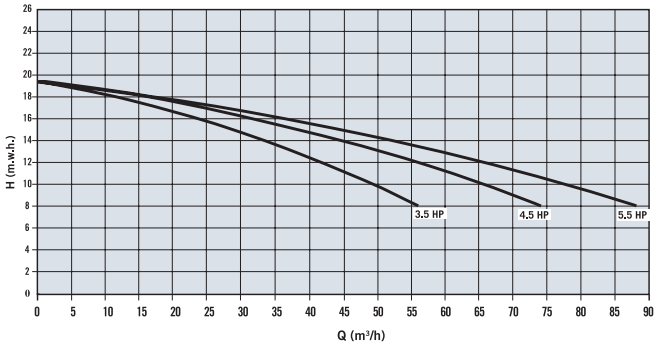

CENTRIFUGAL PUMPS

Kivu

EXPLANATION

High-efficiency plastic pump (1500 rpm) for public swimming pools.

- 3 different models: 3 HP, 4 HP and 5.5 HP.
- Low noise level: Sound level as low as 59 dBA.
- 78% hydraulic efficiency without pre-filter (according to ISO 9906 standard).
- High-quality mechanical seal suitable for use in seawater.
- IEC high-efficiency motor (IE3).
- Standard motor _aft1 (compatible with any manufacturer).
- GS marked product.
- It is shipped with a pre-filter (2 packs: pump + pre-filter).

	Code	Standard PACKAGING	Standard Weight	Standard Volume m3	Unit Price EURO
Kivu 3 HP 230/400 V 50Hz + pre-filter	**66047**	1	56.4	0.35	**2,900.00**
Kivu 3 HP 400/690 V 50Hz + pre-filter	**63042**	1	56.4	0.35	**2,900.00**
Kivu 4 HP 230/400 V 50Hz + pre-filter	**66048**	1	59.4	0.35	**2,950.00**
Kivu 4 HP 400/690 V 50Hz + pre-filter	**63043**	1	59.4	0.35	**2,950.00**
Kivu 5.5 HP 230/400 V 50Hz + pre-filter	**66049**	1	66.4	0.35	**3,300.00**
Kivu 5.5 HP 400/690 V 50Hz + prefilter	**63044**	1	66.4	0.35	**3,300.00**

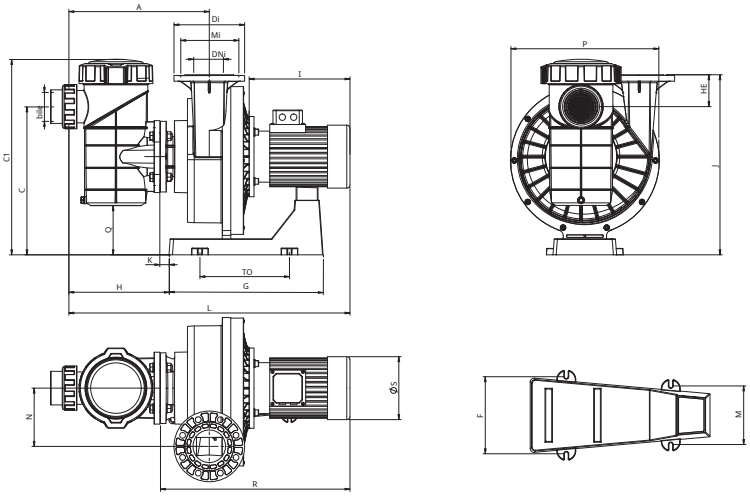

TECHNICAL SPECIFICATIONS

Code	Strength	A	D	DI	DNi	C	C1	TO	F	G	H	I	J	K	L	M	N	HE	P	Q	R	Ma	Mi
	HP	mm																					
63042 66047	3	440	90	220	100 - 4"	462	610	279	206	480	313	320	561	29.5	882	157	181.5	100	460	154	590	-	180
63043 66048	4	440	90	220	100 - 4"	462	610	279	206	480	313	320	561	29.5	882	157	181.5	100	460	154	590	-	180
63044 66049	5.5	440	90	220	100 - 4"	462	610	279	206	480	313	345	561	156	906	157	181.5	100	460	154	621	-	180

Head pressure / Flow rate

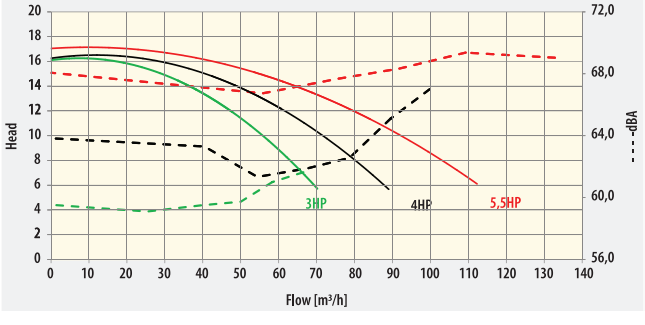

Power / Flow Rate

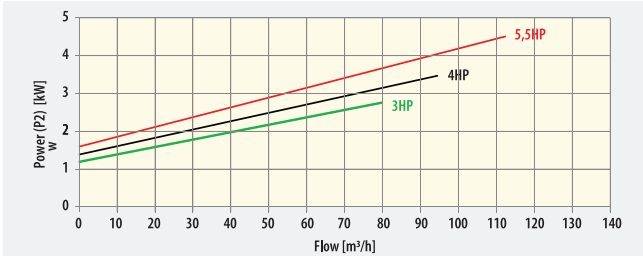

CENTRIFUGAL PUMPS

Kivu

EXPLANATION

High-efficiency plastic pump (1500 rpm) for public swimming pools.

- 3 different models: 7.5 HP, 10 HP and 15 HP.
- Low noise level: Sound level as low as 66 dBA.
- 85% hydraulic efficiency without pre-filter (according to ISO 9906 standard).
- High-quality mechanical seal suitable for use in seawater.
- IEC high-efficiency motor (IE3).
- Standard motor _aft1 (compatible with any manufacturer).
- GS marked product.
- It is shipped with a pre-filter (2 packs: pump + pre-filter).

	Code	Standard PACKAGING	Standard Weight	Standard Volume m3	Unit Price EURO
Kivu 7.5 HP 230/400 V 50Hz + pre-filter	**56633**	1	107.4	0.43	**4,950.00**
Kivu 7.5 HP 400/690 V 50Hz + pre-filter	**56634**	1	107.4	0.43	**4,950.00**
Kivu 10 HP 230/400 V 50Hz + pre-filter	**56635**	1	117.9	0.45	**5,100.00**
Kivu 10 HP 400/690 V 50Hz + pre-filter	**56637**	1	117.9	0.45	**5,100.00**
Kivu 15 HP 230/400 V 50Hz + prefilter	**56638**	1	151.2	0.49	**6,400.00**

0

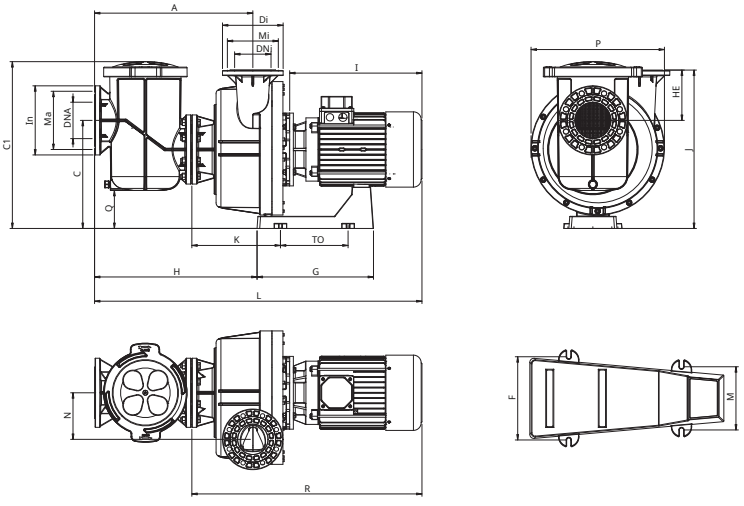

TECHNICAL SPECIFICATIONS

Code	Strength	A	IN	DI																				
	HP																							
56633 56634	7.5	653	285	250	150 - 6"	125 - 5"	446	688	279	206	290	540	410	653	141	1215	157	192	208	550	157	815	240	210
56635 56637	10	653	285	250	150 - 6"	125 - 5"	446	688	279	206	290	540	445	653	141	1250	157	192	208	550	157	850	240	210
56638 56639	15	653	285	250	150 - 6"	125 - 5"	446	688	279	206	290	670	510	653	271	1315	157	192	208	550	157	915	240	210

PERFORMANCE RATINGS (Pump without pre-filter)

Head pressure / Flow rate

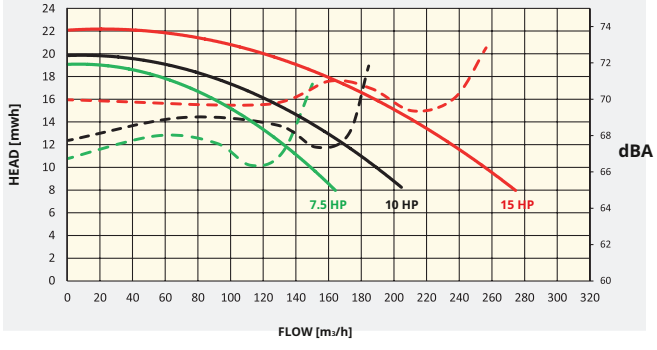

Power / Flow Rate

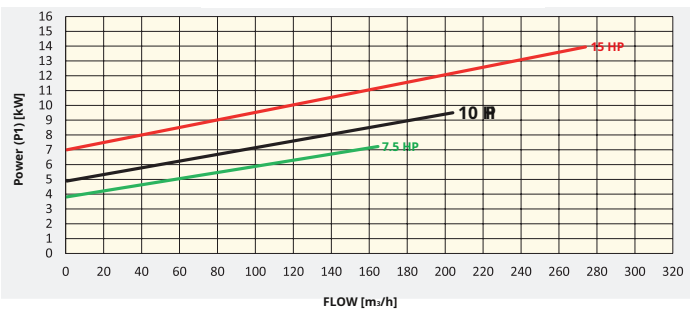

CENTRIFUGAL PUMPS

Colorado

HIGH EFFICIENCY IE2

IE3 VERSION 1
CONTACT US

EXPLANATION

3000 rpm, front
It is a pump. _e af ön
It is manufactured from reinforced polypropylene material. The fan is plastic, with a shaft and IP-55 protection class.

Filtered plastic centrifugal pumps. Ideal for high water volumes at low pressure. The filter cap can be easily opened for maintenance. Pump and pre-filter.

The filter housing is made of berglas steel, and the filter basket is made of stainless steel.

Plastic fan	Code	Code	Standard PACKAGING	Standard Weight	Standard Volume m3	Unit Price EURO
4 HP. 230/400 V	44706	ATPN0452LP	1	56	0.252	**1,900.00**
5.5 HP. 230/400 V	44707	ATPN0552LP	1	56	0.252	**2,000.00**
7.5 HP. 230/400 V	44708	ATPN0752LP	1	57	0.252	**2,625.00**
7.5 HP. 400/690	44709	ATPN0752HP	1	57	0.252	**2,625.00**
10HP. 230/400V	44710	ATPN1052LP	1	68	0.252	**2,850.00**
10HP. 400/690V	44711	ATPN1052HP	1	68	0.252	**2,850.00**
12.5HP, 230/400V	44712	ATPN1252LP	1	72	0.252	**3,700.00**
12.5 HP, 400/690 V	44713	ATPN1252HP	1	72	0.252	**3,700.00**

Bronze fan	Code	Standard PACKAGING	Standard Weight	Standard Volume m3	Unit Price EURO
4 HP. 230/400 V	ATPN0452LB	1	56	0.252	**2,350.00**
5.5 HP. 230/400 V	ATPN0552LB	1	56	0.252	**2,450.00**
7.5 HP. 230/400 V	ATPN0752LB	1	57	0.252	**2,800.00**
7.5 HP. 400/690	ATPN0752HB	1	57	0.252	**2,800.00**
10HP. 230/400V	ATPN1052LB	1	68	0.252	**3,100.00**
10HP. 400/690V	ATPN1052HB	1	68	0.252	**3,100.00**
12.5HP, 230/400V	ATPN1252LB	1	72	0.252	**3,880.00**
12.5 HP, 400/690 V	ATPN1252HB	1	72	0.252	**3,880.00**

TECHNICAL SPECIFICATIONS

Code	VOLTAGE (V)	Strength		Dimensions (mm)								
		kW	HP	A	B	REVENGE	D	TO	F	G	H	L
APTN0452	230/400	2.9	4	375	255	90	405	470	330	200	535	820
APTN0552	230/400	4	5.5	375	255	110	405	470	330	200	535	840
APTN0752	230/400	5.5	7.5	375	255	110	405	470	330	w200	535	840
APTN0752	400/690											
APTN1052	230/400	7.4	10	375	255	110	405	470	330	200	535	910
APTN1052	400/690											
APTN1252	230/400	9.2	12.5	375	255	110	405	470	330	200	535	955
APTN1252	400/690											

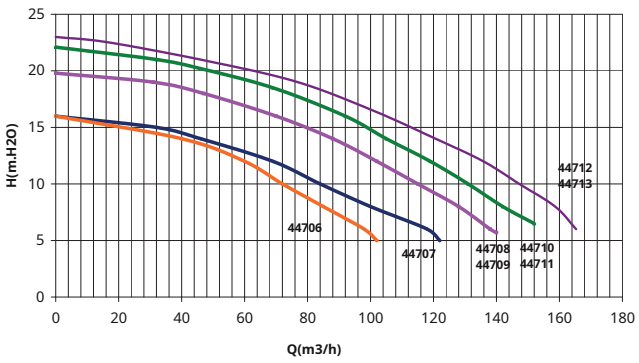

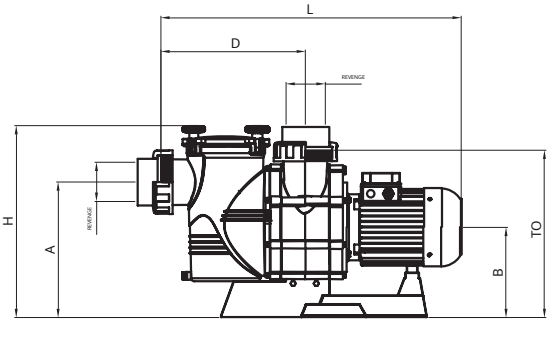

CENTRIFUGAL PUMPS

Aral Plus C-3000

EXPLANATION

The ARAL PLUS C-3000 pump series is made of cast iron and is specifically designed for public swimming pools. It features a standard 2-pole motor design operating at 3000 rpm with up to 12.5 HP. The bronze impeller and all components in contact with water undergo cataphoresis treatment, which provides robust protection against corrosion and oxidation, significantly extending the pump's lifespan and ensuring durability and consistent performance over time.

	Code	Standard PACKAGING	Standard Weight	Standard Volume m3	Unit Price EURO
3HP 230/400 50Hz	**76917**	1	55	0.162	**2,600.00**
4HP 230/400 50Hz	**76918**	1	68	0.162	**2,900.00**
4HP 400/690 50Hz	**76919**	1	68	0.162	**2,900.00**
5.5HP DN100-100 230/400 50Hz	**76920**	1	77	0.197	**3,850.00**
5.5HP DN100-100 400/690 50Hz	**76921**	1	77	0.197	**3,850.00**
5.5HP DN125-100 230/400 50Hz	**76922**	1	90	0.197	**4,100.00**
5.5HP DN125-100 400/690 50Hz	**76923**	1	90	0.197	**4,100.00**
7.5HP 230/400 50Hz	**76924**	1	99	0.197	**4,200.00**
7.5HP 400/690 50Hz	**76925**	1	99	0.197	**4,200.00**
10HP 400/690 50Hz	**76926**	1	104	0.197	**4,500.00**
12.5HP 400/690 50Hz	**76927**	1	113	0.197	**4,800.00**

76917 / 76918 / 76919 / 76920 / 76921 / 76922 / 76923

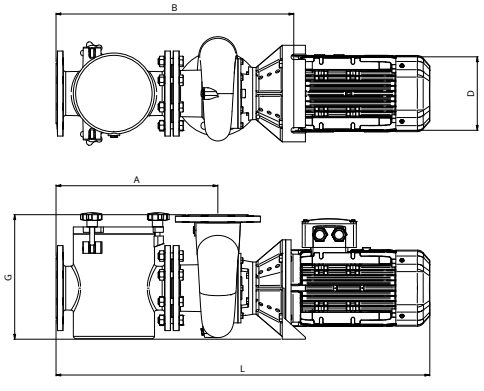

76924 / 76925 / 76926 / 76927

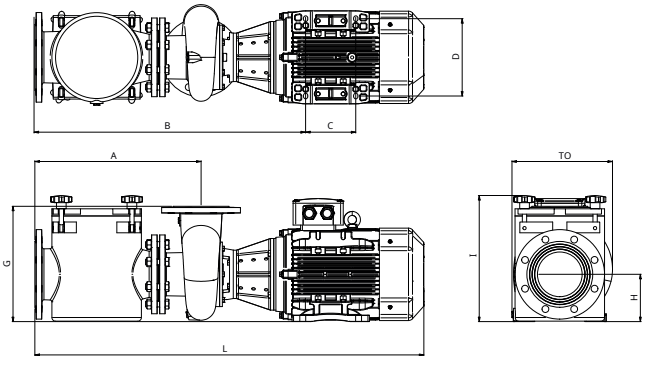

Code	Strength	A	A	Emi_ Ba lant1s1	Print Ba lant1s1	mwc 6	8	10	12	14	16	18	20	22
						m3/h								
76917	2.20 kW (3 HP)	7.6	4.3	80	3" BSP	51	47	42	38	27	8	-	-	-
76918	3 kW (4 HP)	9.9	5.7	100	100	118	105	85.8	70	49	20	-	-	-
76919	3 kW (4 HP)	5.7	3.3	100	100	118	105	85.8	70	49	20	-	-	-
76920	4.00 kW (5.5 HP)	13.0	7.4	100	100	106	99	85	76	58	41	-	-	-
76921	4.00 kW (5.5 HP)	7.4	4.3	100	100	106	99	85	76	58	41	-	-	-
76922	4.00 kW (5.5 HP)	13.0	7.4	125	100	152	130	110	81	55	-	-	-	-
76923	4.00 kW (5.5 HP)	7.4	4.3	125	100	152	130	110	81	55	-	-	-	-
76924	5.5 kW (7.5 HP)	17.6	10.1	125	100	152	136	123	106	81	55	5	-	-
76925	5.5 kW (7.5 HP)	10.1	5.9	125	100	152	136	123	106	81	55	5	-	-
76926	7.5 kW (10 HP)	13.5	7.8	125	100	185	172	158	143	126	106	82	43	-
76927	9.2 kW (12.5 HP)	16.6	9.6	125	100	194	179	163	147	129	109	87	61	26

CENTRIFUGAL PUMPS

Aral Plus C-1500

EXPLANATION

The ARAL PLUS C-1500 is made of cast iron and is specifically designed for public swimming pools. Its four-pole, 1,450 rpm, up to 25 HP design motor is meticulously engineered for high performance, maintaining low noise levels during operation while delivering large flows ideal for large pools.

All components in contact with water undergo a cataphoresis process that provides robust protection against corrosion and oxidation, ensuring durability and consistent performance over time, significantly extending the pump's lifespan.

A bronze fan option is also available.

	Code	Standard PACKAGING	Standard Weight	Standard Volume m3	Unit Price EURO
ARAL PLUS C-1500 4HP 230/400 50Hz ARAL	**76906**	1	103	0.195	**4,350.00**
PLUS C-1500 4HP 400/690 50Hz ARAL PLUS	**76907**	1	103	0.407	**4,350.00**
C-1500 5,5HP 230/400 50Hz ARAL PLUS	**76908**	1	111	0.407	**4,785.00**
C-1500 5,5HP 400/690 50Hz ARAL PLUS	**76909**	1	111	0.407	**4,785.00**
C-1500 7,5HP 230/400 50Hz ARAL PLUS	**76910**	1	143	0.407	**5,400.00**
C-1500 7,5HP 400/690 50Hz ARAL PLUS	**76911**	1	143	0.407	**5,400.00**
C-1500 10HP 400/690 50Hz	**76912**	1	153	0.407	**5,570.00**
ARAL PLUS C-1500 1 2.5HP 400/690 50Hz	**76913**	1	213	0.407	**6,150.00**
ARAL PLUS C-1500 1 5HP 4 00/690 50Hz	**76914**	1	243	0.407	**9,200.00**
ARAL PLUS C-1500 2 0HP 4 00/690 50Hz	**76915**	1	298	0.407	**12,600.00**
ARAL PLUS C-1500 2 5HP 4 00/690 50Hz	**76916**	1	314	0.407	**15,600.00**

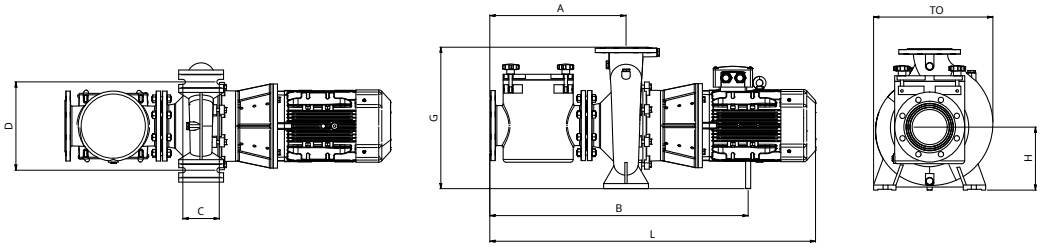

Code	Strength			Emi_ Ba lant1s 1	Print Ba lant1s1	mwc 6	8	10	12	14	16	18	20	22
		A	A			m3/h								
76905	2.20 kW (3 HP)	7.9	4.5	100	50	54	48	42	36	28	17	-	-	-
76906	3 kW (4 HP)	10.5	6	100	80	73	66	55	46	33	11	-	-	-
76907	3 kW (4 HP)	6.1	3.5	100	80	73	66	55	46	33	11	-	-	-
76908	4 kW (5.5 HP)	13.8	7.9	100	80	99	91	82	70	58	42	19	-	-
76909	4 kW (5.5 HP)	7.9	4.6	100	80	99	91	82	70	58	42	19	-	-
76910	5.5 kW (7.5 HP)	18.6	10.7	125	100	140	128	114	97	67	23	-	-	-
76911	5.5 kW (7.5 HP)	10.7	6.2	125	100	140	128	114	97	67	23	-	-	-
76912	7.5 kW (10 HP)	14.3	8.3	125	100	156	145	131	117	97	73	13	-	-
76913	9.2 kW (12.5 HP)	17.5	10.1	150	100	199	185	170	154	131	112	77	-	-
76914	11 kW (15 HP)	20.4	11.8	150	100	-	-	175	163	146	125	102	73	-
76915	15 kW (20 HP)	27.3	15.8	200	125	-	299	287	260	222	175	126	-	-
76916	18.5 kW (25 HP)	33.5	19.4	200	125	-	-	369	349	324	293	244	184	101

Blowers

EXPLANATION

Blowers are designed for applications such as spas, baths, hydromassage, and similar settings where a continuous stream of air bubbles is desired at medium to high flow rates. They can also be used for aerating filter sand beds, for example, in backwashing processes where low-density airflow is required.

The filter housing and fan are manufactured from aluminum alloy using injection molding, while the motor shaft is made of stainless steel. The fan is dynamically balanced and directly connected to the shaft. The three-phase and single-phase motors, suitable for continuous use, are manufactured from stainless steel according to CEI2/3 1988 standard regulations and have IP54 protection and class-F insulation. Voltage ratings are 100-120/200-240V for single-phase models and 200-240/380-440V for three-phase models. The pump can be mounted vertically or horizontally. Furthermore, because there is no contact between moving parts, there is no need for lubrication or maintenance, and the parts are not subject to wear.

The maximum operating temperature of the turbines is 40°C. Do not use with flammable or explosive gases.

TECHNICAL SPECIFICATIONS

Model	Code	Voltage (V)	Phase	Flow (m3/h)	Maximum pressure (mbar)	weight kg	Standard Volume m3	Unit Price EURO
Blower 0.4 kW	33970-2450	Δ200-240 Y 345-415	3	80	130	10	0.045	670.00
Blower 0.85 kW	35388-2450	200-240	1	145	160	17	0.059	745.00
Blower 0.85 kW	35387-2450	Δ200-240 Y 345-415	3	145	160	16	0.045	805.00
Blower 1.3 kW	31090-2450	200-240	1	210	170	23	0.059	805.00
Blower 1.3 kW	31091-2450	Δ200-240 Y 345-415	3	210	170	22	0.059	805.00
Blower 1.5 kW	33971-2450	200-240	1	210	220	24	0.064	955.00
Blower 1.6 kW	31092-2450	Δ200-240 Y 345-415	3	210	220	23	0.064	955.00
Blower 1.6 kW 2V	35389-2450	Δ200-240 Y 345-415	3	150	300	25	0.087	1,090.00
Blower 2.2 kW	31093-2450	Δ200-240 Y 345-415	3	318	230	30	0.097	1,120.00
Blower 3.0 kW 2V	31094-2450	Δ200-240 Y 345-415	3	230	410	40	0.126	1,610.00
Blower 3.0 kW	31095-2450	Δ200-240 Y 345-415	3	318	280	36	0.097	1,610.00
Blower 4.3 kW 2V	31096-2450	Δ345-415 Y 600-720	3	520	600	54	0.217	2,225.00
Blower 5.5 kW	31097-2450	Δ345-415 Y 600-720	3	530	320	63	0.16	2,925.00
Blower 5.5 kW 2V	33972-2450	Δ345-415 Y 600-720	3	320	515	66	0.201	3,075.00

Blower liters

connection	Code	Standard PACKAGING	Standard Weight	Standard Volume m3	Unit Price EURO
1"	56489	1	-	-	215.00
1 ¼"	56402	1	-	-	215.00
1 ½"	56403	1	-	-	225.00
2"	56404	1	-	-	340.00
2 ½"	56405	1	-	-	390.00

Blower silencer

The steel silencer contains a polyurethane absorber to reduce sound.

connection	Code	Standard PACKAGING	Standard Weight	Standard Volume m3	Unit Price EURO
1 ¼"	56406	1	-	-	125.00
1 ½"	56407	1	-	-	150.00
2"	56408	1	-	-	170.00
2 ½"	56409	1	-	-	225.00

Blower safety valve

connection	Code	Standard PACKAGING	Standard Weight	Standard Volume m3	Unit Price EURO
1 ¼"	65287	1	-	-	345.00
2 ½"	65288	1	-	-	455.00

ELECTRICAL CONTROL PANELS

- IP-65 protection.
- Lockable and keyable control panel.
- All units are compatible with the following:
- - 220/240V 1 phase (P+N+T) 50Hz/60Hz
- - 380/415V 3 phase (3P+N+T) 50Hz/60Hz
- - 220/230V 3 phase (3P+T) 50Hz/60Hz
- Hourly programming and 24-hour programming options.
- Connection for remote control of the pump (on/off, etc.) and auxiliary equipment (water temperature, level control, etc.).
- **All products included:**
- - Electrical diagram
- - Connection diagram
- - Assembly instructions
- - CE conformity certificate
- - The places where the cables will enter are ready.
- - Screws and dowels (4) for fixing to the wall
- The control panel model should be selected according to the pump's nominal voltage:

TECHNICAL SPECIFICATIONS				
T1P	**Amperage**	Power Range1 1 1-phase 230V	**Power Range 1 1** 3-phase 400V	Power Range1 1 3-phase 230V
A	1.6A - 2.5A	1/4 HP	3/4 HP - 1 HP	1/2 HP
B C	2.5A - 4A	1/2 HP	1.5 HP - 2 HP	3/4 HP - 1 HP
D	4A - 6.3A	3/4 HP - 1 HP	3 HP*	1.5 HP
	6A - 10A	1.5 HP	4 HP**	2 HP - 3 HP

* Also 3.5 hp 400V 3~ in plastic (code 08003)
* * Also 4.5 and 5.5 hp 400 V 3~ in plastic (codes 08004, 08005)

Control Panel; load protected pumps

Thermal load protection (1.6 to 10A), contactor, 24-hour programming clock, 3-position modular switch. Automatic / 0 / Manual.

	Code	Standard packaging	Standard **A 1rl1k** kg.	Standard volume m3	Unit Price EURO
Type A	25717	1	1.9	0.014	265.00
Type B	25718	1	1.9	0.014	265.00
Type C	25719	1	1.9	0.014	270.00
Type D	25720	1	1.9	0.014	265.00

6582-1:2015

Complies with Standard EN 16582-1:2015

Control Panel;

load-protected pumps and for lighting.

Thermal load protection (1.6 to 10A), contactor, 24-hour programming clock, 3-position modular switch. Automatic / 0 / Manual.

	Code	Standard PACKAGING	Standard volume kg	Standard volume m3	Unit Price EURO
Type A	25721	1	2.3	0.014	300.00
Type B	25722	1	2.3	0.014	300.00
Type C	25723	1	2.3	0.014	300.00
Type D	25724	1	2.3	0.014	300.00

Control Panel

For load-protected pumps and differential-protected submersible lamps

EXPLANATION

Thermal load protection (1.6 to 10A), contactor, 24-hour programming timer.

Three positions: Automatic/0/Manual. Protected 230 V 10 A output and controlled for underwater spotlights. Single phase.

	Code	Standard PACKAGING	**Standard A in kg**	**1rl1k** Standard Volume m3	Unit Price EURO
Type A	25725	1	2.1	0.014	400.00
Type B	25726	1	2.1	0.014	400.00
Type C	25727	1	2.1	0.014	400.00
Type D	25728	1	2.1	0.014	400.00

Control Panel

for load-protected pumps and differential-protected underwater lamps

EXPLANATION

Thermal load protection (1.6 to 10A), contactor, 24-hour programming timer.

Three positions: Automatic/0/Manual. Protected 230 V 10 A. Controlled for outputs and outputs. Three stages. Three phase.

	Code	Standard packaging	Standard a kg	**1rl1k** Standard volume m3	Unit Price EURO
Type A	25729	1	2.4	0.015	475.00
Type B	25730	1	2.4	0.015	475.00
Type C	25731	1	2.4	0.015	475.00
Type D	25732	1	2.4	0.015	475.00

Control Panel

load protected pumps and 1 set LED underwater lamp

EXPLANATION

Control box for pump overload protection and 1 set of LED underwater lamps. Thermal overload protection (1.6 to 10A), contactor, 24-hour programming timer. Three positions: Automatic/0/Manual. 12V 100VA. 1 set of LED underwater protected output.

	Code	Standard Package	Standard**a kg**	**1rl1k** Standard volume m3	Unit Price EURO
Type A	74991	1	4.6	0.021	440.00
Type B	74992	1	4.6	0.021	440.00
Type C	74993	1	4.6	0.021	440.00
Type D	74994	1	4.6	0.021	440.00

Control Panel;
load protected pumps and lamps

EXPLANATION

Control box for pump overload protection and 1 underwater outlet. Thermal overload protection (1.6 to 10A), contactor, 24-hour programming timer. Three positions: Automatic/0/Manual. 12 V 315. Protected outlet for 1 underwater outlet.

	Code	Standard PACKAGING	**Standard A 1rl1k**kg	Stand in m3	Unit Price EURO
Type A	69916	1	6	0.021	430.00
Type B	69917	1	6	0.021	430.00
Type C	69918	1	6	0.021	430.00
Type D	69919	1	6	0.021	430.00

Control Panel
2 pumps with load protection and 2 underwater lighting controls.

Thermal load protection (1st pump: 4 poles, 10 A max. / 2nd pump: 2 poles, 10 A max.), contactor, 24-hour programming timer, modular switch "Automatic / 0 / Manual". Transformer 230/12 V -600VA, 300W for 2 underwater pumps.

		Standard Package	weight Standard volume**im** kg	m3	Unit Price EURO
Type C + Type D	70423	1	9.5	0.024	775.00
Type D + Type D	70424	1	9.5	0.024	775.00

Control Panel
1 pump, load protection and 3 underwater lighting controls

EXPLANATION

Thermal load protection (4-pole, 10 A max.), contactor, 24-hour programming timer, modular switch "Automatic / 0 / Manual". Transformer 230/12 V -600VA + 300VA, 300W for underwater use.

	Code	Standard Package	**Standard A 1l1k**kg	Standard volume m3	Unit Price EURO
Type A	70425	1	10.4	0.024	785.00
Type B	70426	1	10.4	0.024	785.00
Type C	70427	1	10.4	0.024	785.00
Type D	70428	1	10.4	0.024	785.00

SNOW CURRENT SWIMMING EQUIPMENT

Basic NL contre current

EXPLANATION

Bright AISI-316L stainless steel front cover, mixed flow nozzle set, interchangeable with nozzle sets 11499 and 11014, versatile water-air return nozzle, 60 m3/h suction capacity and on/off switch. Optional handle (code 65535).

	Code	Standard PACKAGING	Standard Weight	Standard Volume m3	Unit Price EURO
Basic NL for reinforced concrete pools.	66470	1	-	-	4,500.00

- The feeding nozzle (air-water) is made of AISI 316 stainless steel.
- 60 m3/h capacity emi_ a z1 manufactured from AISI 316 stainless steel.
- 5.5 hp pump
- Adjustable flow rate between 27-40 m3/h
- Power control box
- Operates with three-phase electricity.

LIMITED STOCK.

Basic ND contre current

EXPLANATION

Kar_1 Ak1nt1 system kit:
"The front panel with air-water mixing nozzle is made of AISI 316 grade stainless steel."
Illuminated piezoelectric ON-OFF button made of AISI-316 stainless steel.

It has been produced.

"The 60 m³/h capacity suction nozzle is manufactured from polished AISI-316 stainless steel."

5.5 HP pump.

" Flow rate 60 m³/h.

" Power control box for 5.5 HP

" pump. It operates with three-phase electricity.

	Code	Standard PACKAGING	Standard Weight	Standard Volume m3	Unit Price EURO
Basic ND for reinforced concrete pools, Basic ND for liner pools	**65498**	**1**	**-**	**-**	**4,900.00**
	66044	**1**	**-**	**-**	**6,300.00**

Marlin system nozzle

EXPLANATION

White ABS snow_1 flow system nozzle

White ABS snow_1 discharge nozzle	Code	Standard PACKAGING	Standard Weight	Standard volume m3	Unit Price EURO
Marlin XS	45618	1	1.553	0.015	780.00

Marlin contre current system

+ Economickar_1 ak1nt1 swimming system.
+ Offered as a kit, the innovative design and concept (including nozzle, housing, control box and pump) makes it a valuable addition to your pool.

+ Thanks to its high-performance hydraulic features, the Marlin snow removal system is a highly competitive product and is available in 3 models:
Marlin 30 II, Marlin 30 III and Marlin 45 III.
+ Grab handles[1] and a hydromassage hose can be added as optional extras.

Marlin 30 II (single-phase)contre current system

EXPLANATION

It consists of: Nozzle front plate, plastic housing, control box and pump 2.2 kW (3 HP) 230 V II 50 Hz.

	Code	Standard PACKAGING	Standard Weight	Standard volume m3	Unit Price EURO
Marlin 30 Mono	35375	1	37.4	0.260	2,600.00

Marlin 30 III (three-phase)contre current system

EXPLANATION

It consists of: Nozzle front plate, plastic housing, control box and pump 2.2 kW (3 HP) 400 V III 50 Hz.

	Code	Standard PACKAGING	Standa kg	1rl1k Standard volume m3	Unit Price EURO
Marlin 30 Three-Phase	35376	1	37.4	0.260	2,900.00

Marlin 45 III (Three-phase)contre current system

EXPLANATION

It consists of: Nozzle, concrete transition piece, control panel and three-phase pump 3.3 kW (4.5 HP) 400 V III 50 Hz.

	Code	Standard PACKAGING	Standard Weight	Standard Volume m3	Unit Price EURO
Marlin 45 III Three-Phase	35377	1	42.2	0.260	3,000.00

Code 11503 for liner pools.
A gasket kit is required.

SNOW CURRENT ACCESSORIES

AISI-316stainless steel snow_1 flow_1 nozzle

EXPLANATION

Massage nozzle made of AISI-316 stainless steel. Includes pneumatic opening button and air regulator.

	Code	Standard PACKAGING	Standard Weight	Standard Volume m3	Unit Price EURO
Stainless steel jet stream nozzle	**11499**	1	4.7	0.039	**1,000.00**

ABS snow_1 flow nozzle

grab handle

EXPLANATION

The Massager a z1 includes a grab handle, on/off switch, and air regulator.

	Code	Standard PACKAGING	Standard Weight	Standard Volume m3	Unit Price EURO
ABS jet stream nozzle	**11013**	1	4.2	0.039	**1,000.00**

Stainless steel concrete transition piece

EXPLANATION

Made of AISI-316L stainless steel. 240 mm depth. Suitable for both concrete and prefabricated pools. Supplied with sealing elements and 3 m cable conduit.

Code	Standard PACKAGING	weight kg	Standard volume m3	Unit Price EURO
00243	1	7.79	0.04	700.00

Plastic concrete transition piece

EXPLANATION

It is made of non-destructive plastic. It is supplied with sealing elements and two pipes, each 3 m long.

Code	Standard Packaging	Standard Weight	Standard volume m3	Unit Price EURO
11502	1	5.0	0.036	690.00

Massage hose

EXPLANATION

The drainpipe will be attached to the door. Length: 1.5 m.

Code	Standard PACKAGING	weight kg	Standard volume m3	Unit Price EURO
00247	1	1.22	0.01	115.00

$EcoParkControl Panels1

Control panel

EXPLANATION

Electro-pneumatic box. Pumps are operated by nozzle front plate buttons.

	Code	Standard packaging	standard weight kg	Standard volume m3	Unit Price EURO
230 V II 1.5 kW (2 HP) pumps 230 V II	11507	1	1.2	0.004	**800.00**
2.2 kW (3 HP) pumps 400 V III 2.2 kW (3	25456	1	1.2	0.004	**880.00**
HP) pumps 230/400 V III 2.6 kW (3.5	32151	1	1.2	0.004	**810.00**
HP) pumps 400 V III 4 kW (5.5 HP)	11506	1	1.2	0.004	**800.00**
pumps	65536	1	-	-	**840.00**

Jet stream pump

EXPLANATION

It is specially designed for snow current systems requiring high flow rates. All parts in contact with water are made of AISI-316 stainless steel, offering high resistance to corrosion.

	Code	Standard PACKAGING	Standard Weight	Standard Volume m3	Unit Price EURO
1.5 kW 2 HP single-phase	**28566**	1	21.0	0.095	**1,400.00**
2.2 kW 3 HP single-phase	**28568**	1	22.6	0.095	**1,450.00**
2.2 kW 3 HP three-phase	**30774**	1	22.5	0.095	**1,400.00**
3.3 kW 4.5 HP three-phase (IP 54 motor protection)	**11509**	1	22.5	0.098	**1,850.00**
4 kW 5.5 HP three-phase	**65549**	1	32.6	-	**2,150.00**

Jet stream pump

EXPLANATION

Plastic-bodied jet stream pump. Double insulated motor shaft. IP-54 motor protection.

	Code	Standard PACKAGING	Standard Weight	Standard Volume m3	Unit Price EURO
1.5 kW 2 HP single-phase	**11505**	1	27.0	0.095	**1,500.00**
2.6 kW 3.5 HP three-phase	**11504**	1	30.5	0.098	**1,550.00**

PUMPS

COMPLETE PRODUCTS FOR EVERY NEED

> DE 1_KEN FAST, NEW1 ECO-SILENT STANDARD

De i_ken h1zl1 pompalar**While offering 4 key advantages**It has longer daily operating periods at lower speeds.**:**

1) SILENT OPERATION

Zodiac® high-speed pumps produce up to 24 dB(A)* less noise than single-speed pumps. This is equivalent to the sound level in this library.

To inform?

A 3 dB(A) decrease in sound volume represents noise that the human ear perceives as twice as quiet.

2) ENERGY SAVING

Thanks to TEFC** continuous magnetic synchronous motors1 using ECM*** technology, Zodiac® pumps are incredibly fast.**It reduces electricity consumption by up to 90%.**Thus, compared to a single-speed pump, it can be seen that it pays for itself in just a few seasons.

3) GEL1_M1_ WATER DISINFECTION

Its flexibility to operate at low speeds and adapt to all pools reduces the speed of water as it passes through the filter, and**significantly improves filtration quality.**This also reduces the risk of filter clogging.

To inform?

The combination of a high-speed pump and cartridge filter creates an environmentally friendly system that consumes less water (no backwashing).

4) CONNECTION

With the new iQPUMP Wi-Fi connection device, FloPro™ VS Pumps can be controlled remotely via the iAquaLink™ app.

To inform ?

With the AquaLink™ app, you can manage and program the filtration system and pump remotely using a simple and easy-to-use interface (up to 10 different programs).

Available on the App Store

ANDROID APP ON Google play

3 YEAR GUARANTEE

LOW VOLUME LEVEL

ENERGY SAVINGS

NATURE FRIEND

BIG CAPACITY

EASY SETUP

EASY DE 1_1M

Energy Productive

* A standard filtration pump producing at least 66 dB(A) of noise has been used as a basis. Values are expressed at an acoustic power level of Aa according to ISO Standard 3741.

* * TEFC = Totally-Enclosed Fan-Cooled (Totally-Enclosed Fan-Soutmal1)

* * * ECM = Electronically Commutated Engine (= electronically controlled <brushless= engine)

DESIGNED TO ATTRACT YOUR CUSTOMERS

Our filtration products are formulated according to the needs specified in consumer panels*.

Thus, this new product range and its unique advantages will win the hearts of your customers.

> STRONG GUARANTEE1

86% of consumers1* are looking for reliable, long-lasting products.

"Our pumps come with all their parts, including the parts that wear out.

Including (mechanical components, pre-filter basket, fittings, etc.).

3-year warranty.

3 YEAR GUARANT1 ALL PARTS

> EASY MAINTENANCE

75% of users value ease of maintenance.

"All our pumps have a very wide range of features for easy maintenance.

It has a pre-filter basket (2.6 liters), meaning the cleaning time is longer.

BIG CAPACITY

Up to 117% DAHA GEN1_

> ENERGY SAVING

66% of users want to keep their energy consumption under control.

"Our high-speed pumps have very high energy efficiency.
It has high efficiency.

"Our single-speed pumps offer high performance.
You can choose our models with lower power compared to competitors (depending on the dimensions).

NATURE FRIEND

* =The "Usage and Attitudes" consumer survey conducted in France in 2015 with the participation of 779 people.

EASY ASSEMBLY

Our filtration series is designed to make your daily life easier:**Simple, quick assembly and easy maintenance.**

> EASY-TO-ASSEMBLE PUMPS, EVEN WHEN REPLACING WITH SOMEONE ELSE.

All Zodiac® filtration pumps[1] feature a unique FloPro™ platform that offers the same[1] installation, replacement and maintenance advantages for all models in our filtration range.

Strengths:

1. Suction and discharge fittings1**double-sided**(d1_tan and 299 internal di_li),
2. Special**Ø63/ Ø50 mm fitting**connections,
3. **Pump base**
   (Included with FloPro™ VS, optional for other models)

"Easy Retrofit:

The pumps operate without altering existing piping systems and**Thanks to its bases, it easily adapts to most existing systems.** "This system is a solution for equivalent models of both single-speed and variable-speed pumps.

*The values shared by the manufacturing companies were used as a basis for the i_im compatibility.

According to current installation standards, if [pipe length] = 4x[pipe diameter], a tolerance of +/- 10 mm is acceptable.

Pump models with purple lettering have compatible suction and discharge lines.

Pump models marked in blue are only compatible with the suction line (requires minor modifications to the discharge line installation).

DE 1_1M L1STES1

De i_ecek pompa	Pump de i_im solution
Hayward®:TriStar, SuperPump, Max-FloMax-Flo, SuperPool, SuPerPool II, Super II, RS II **Cryptosol**®:Koral-KSE/KSV, Caribe-CK, Ondina-OK, Epsilon-EP, Prime-KPR/KPRV, KS Evo, KSX Pro **Hair**®:Optima **Speck**:BADU Bettar / TOP / Magna, BADU Gamma, BADU Eco Touch-Pro / Eco Soft, BADU90, BADU Prime / Prime Eco VS	**A** **FloPro**TM, baseless
DAB®:Swim, EUROswim& EUROpro 50, 75 & 100, E-Swim **Espa**®: Silen Plus 1M, Silen Plus 2M / 3M, Silen S, Silen S2, Silver **Hair**®: Winner, [e]Winner **Speck**®:BADU Profi	**B** **FloPro**TM+ thin base
AstralPool®:EUROpa **Speck**®:BADU EasyFit	**C** **FloPro**TM+ thin base + base
AstralPool®:Victoria Plus, Victoria Plus Silent, Glass Plus, Discovery, Niagara	**D** **FloPro**TM+ thick base

PUMPS

LONG-LASTING AND EFFICIENT SINGLE-SPEED PUMPS FOR SWIMMING POOLS

FloPro# pumps are made of corrosion-resistant material. Pump housing**long-lasting and quiet** It is manufactured from a special polypropylene material that ensures its durability.

To meet the needs of many pools High-efficiency synchronous motors available in 9 different models (0.5 - 2.0 HP, including single-phase and three-phase models, excluding the 0.5 HP model).

FloPro#platformu, with most of the advanced pumps on the market,**"Thanks to the EasyRetrofit system, it adapts without any restrictions and without the need to change the installation.**

3 YEAR GUARANT1

ALL SWIMMING POOL TYPES

BIG CAPACITY

EASY SETUP

EASY DE 1_1M

STANDARD ASSEMBLY

1. FloPro™pump
2. Filter
3. Heating system
4. Water disinfection system

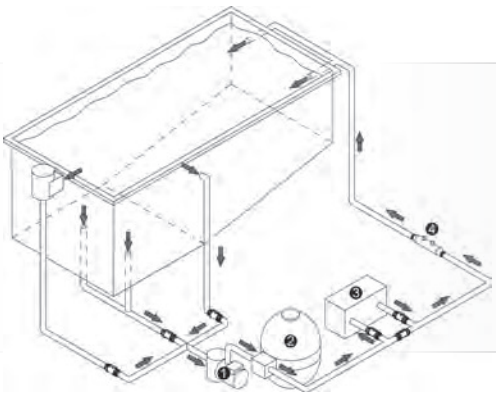

TO COMPARE TABLE

	FloPro™ETC	E30iQ	FloPro™
	Variable speed pump, for maximum energy savings	Variable speed pump, simple and energy efficient	Single-speed pumps, Long-lasting for all pools and efficient
Guarantee	3 years	3 years	3 years
"Easy retro t" easy assembly.	•	•	•
Pump stand for "Easy retro t"	•	Option	Option
Large capacity pre-filter	•	•	•
Number of speeds	8	3	1
Pump speed	600-3450 RPM	40 - 100%	2850 RPM
Number of models	1	2	9
Power (P2)	1.65 HP	1 and 2 HP	0.5 to 2.0 HP
Maximum pool volume	100 m3	150 m3	150 m3
Optimum yield volume	30-80 m3	15-120 m3	-
Removable user interface	•		-
Dry contact test	•	•	-
Zodiac® AquaLink® TRi automation compatibility	•	iAquaLink+	-
iQPUMP compatibility (smartphone control)	•	-	-

DE 1_KEN HIGH-SPEED PUMPS

FloPro™ETC

3 YEAR GUARANTEE

ALL THE POOL TYPES

ENERGY SAVINGS

EASY DE 1_1M

LOW VOLUME LEVEL

NATURE FRIEND

MagnaPool ECOSYSTEM

iAquaLink COMPATIBLE

Energy Productive

+ Guaranteed energy savings and quiet operation.
+ Smart work
+ Remote control

ACCESSORIES INCLUDED IN THE PACKAGE

Wall-mounted kit (for standard FloPro™ VS only)	1st pump base	Thick pump base	63/50mm connection fittings1

1LG1L1 PRODUCTS

CS Cartridge_Filter	iQPUMP	MS Giltre
WF000024/25	WA000017	WF000094/95/96/97 & 98

PRODUCT CODE & UNIT PRICE

Model	FloPro™ETC	FloPro™VS AUT
Standard Model	WP000003	WP000079
	2,600 Euros	2,175 Euros

EXPLANATION

Model	FloPro™ETC	FloPro™VS AUT
User1 interface	1-line LCD screen (blue)	/
Languages	6 (FR-EN-ES-DE-IT-NL)	
Play mode	Independent, with Zodiac® automation connection, external dry contact control	iQPUMP or Zodiac automation ba l1
Clock / Timer	24-hour timer (h1z 1 & 2), Rest mode (speed 3 & 4)	via the iAquaLink™ application (Up to 10 timers)
H1z say1s1	8 programmable and adjustable speeds (+/- 10 RPM)	10 programmable and adjustable speeds iAquaLink™with
Start	Automatic initially, adjustable speed and duration.	
Security features	Electronic freeze protection1 Automatic shutdown in case of high or low voltage.	
Filter basket volume	2.6 L	
connection	DN50 mm & DN63 mm (299 threaded inlet & outlet, 63/50mm connection fittings included)	
Place of use	Freshwater and saltwater 6 g/lt (6000 ppm) maximum	

TECHNICAL SPECIFICATIONS

Model	FloPro™ETC	FloPro™VS AUT
Pump type	Self-priming pool pump	
Engine type	Permanent magnetic synchronous motor (ECM* technology), TEFC**, Class F insulation.	
Yield	> 80% (IE3 Standard 1)	
Power of C1k1 HP (P2)	1.65	
Power C1k1 Kw (P2)	1.23	
Flow rate at 10 mSS (m3/h)	24.1 m3/h (at 3450 RPM)	
Maximum flow rate (m3/h)	30.7 m3/h	
Maximum head height (m)	21.5 m	
Maximum water temperature 1	35 °C	
Speeds	600 - 3450 RPM (can be changed in 10 RPM increments)	
Protection class 1	IPX4	
Power supply	220-240 VAC - 50/60 Hz	
External control connections	RS485 for AquaLink® TRi or iQPUMP connection, external dry contact connection (speeds 1 - 4)	

* : ECM = Electronic Control Motor
*** : Fully-Closed1 Fan-So utmal1

E30iQ

+ Guaranteed energy savings.
+ Silent
+ Remote control from anywhere, anytime.

3 YEAR GUARANTEE
ALL THE POOL TYPES
ENERGY SAVINGS
EASY DE 1_1M
NATURE FRIEND
LOW VOLUME LEVEL
Energy Productive
iAquaLink CONTROL

ACCESSORIES INCLUDED IN THE PACKAGE

63/50mm union tailpieces

OPTIONAL ACCESSORIES		PRODUCTS	
1st pump base	Thick pump base	CS Cartridge_Filter	MS Filter
R0486701	R0546401	WF000024/25	WF000094/95/96/97 & 98
35.00 Euro	32.00 Euro	740.00	960.00

PRODUCT CODE & UNIT PRICE

Model	E30iQ 100	E30iQ 200
Standard Model	WP000221	WP000222
	1,360 Euros	1,700 Euros

EXPLANATION

Model	E30iQ 100	E30iQ 200
User1 interface	1-line LCD screen (white)	
Play mode	Independent, Zodiac® automation connection, external dry contact control.	
Clock / Timer	24-hour timer (h1z 1 & 2)	
H1z say1s1	3 programmable speeds. Factory settings: ECO (50%), CLEAN (75%) & BOOST (100%)	
Start	Automatic initially, adjustable speed and duration.	
Security features	Automatic shutdown in case of high voltage and overheating.	
Filter basket volume	2.6 L	
connection	DN50 mm & DN63 mm (299 threaded inlet & outlet, 63/50mm connection fittings included)	
Place of use	Freshwater and saltwater 6 g/lt (6000 ppm) maximum	
Application control	iAquaLink+	

TECHNICAL SPECIFICATIONS

Model	E30iQ 100	E30iQ 200
Pump type	Self-priming pool pump	
Engine type	Permanent magnetic synchronous motor (ECM* technology), TEFC**, Class F insulation.	
Yield	> 80% (IE3 Standard 1)	
Power of C1k1 HP (P2)	1	2
Power C1k1 Kw (P2)	0.75	1.5
Flow rate at 10 mSS (m3/h)	15.5 m^3/h (at 100%)	25.1 m^3/h (at 100%)
Maximum flow rate (m3/h)	21 m3/h	31.5 m^3/h
Maximum head height (m)	18m	20.5m
Maximum water temperature 1	35 °C	
Speeds	40 - 100% (can be changed in 1% increments)	
Protection class 1	IPX5	
Power supply	230 VAC - 50/60 Hz	

* : ECM = Electronic Control Motor
*** : Fully-Closed1 Fan-So utmal1

PERFORMANCE

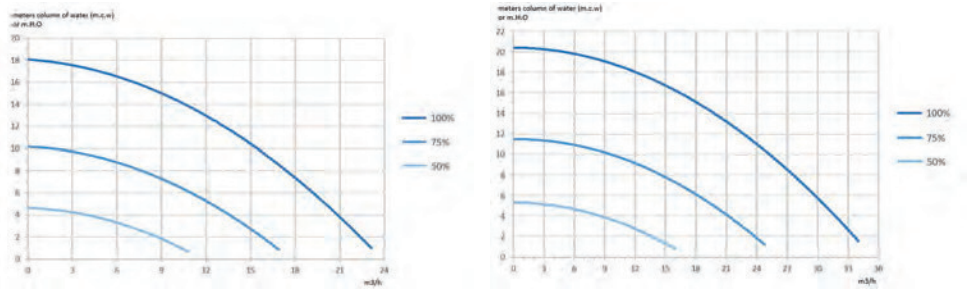

DIMENSIONS AND WEIGHT

Model	E30iQ 100	E30iQ 200
Length	59 cm	
Height	32.4 cm (excluding pump base)	
Width	25.4 cm	
A 1rl1k	15 kg	18 kg

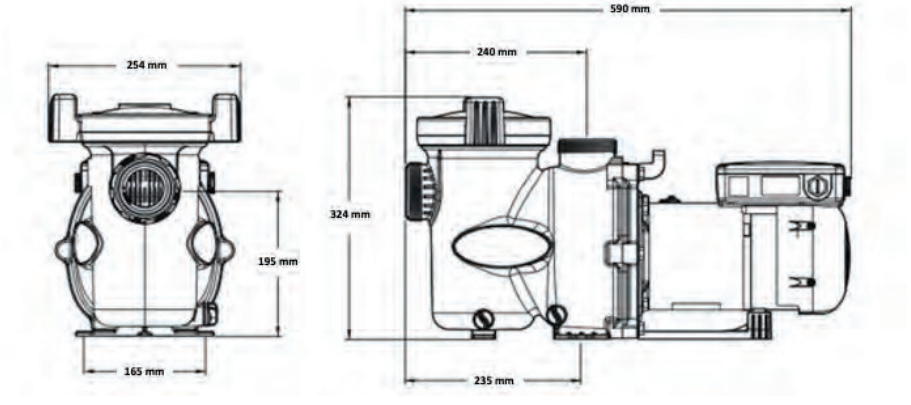

ASSEMBLY

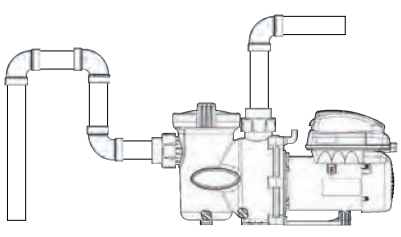

Wrong 1_: Air intake and wrong 1_ pre-filter
risk of overfilling.

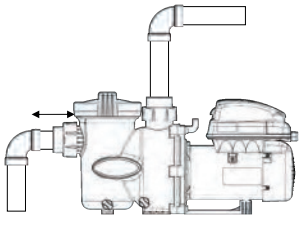

Wrong 1: The Emi line is too short.
risk of cavitation.

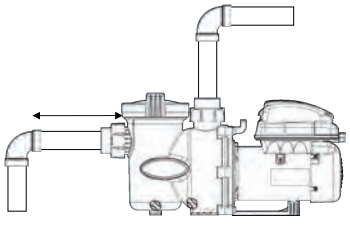

Do ru : Do ru emi_ hatt1 length = 4 x pipe diameter1 (20cm for D 50mm) (and 25cm for D 63mm)

SINGLE SPEED PUMPS

FloProTM

+ Long-lasting
+ High efficiency
+ Silent

3 YEAR GUARANTEE

ALL THE POOL TYPES

EASY DE 1_1M

ACCESSORIES INCLUDED IN THE PACKAGE

63/50mm connection fittings

OPTIONAL ACCESSORIES		1LG1L1 PRODUCTS	
1st pump base	Thick pump base	CS Cartridge_Filter	MS Filter
R0486701	R0546401	WF000024/25	WF000094/95/96/97 & 98
35.00 Euros	32.00 Euros	740.00 Euros	960.00

PRODUCT CODE & UNIT PRICE

FloProTM	50M	75M	75T	100M	100T	150M	150T	200M	200T
Standard Model	WP000147	WP000148	WP000149	WP000150	WP000151	WP000152	WP000153	WP000154	WP000155
	660.00	680.00	740.00	750.00	780.00	830.00	860.00	920.00	925.00

EXPLANATION

FloProTM	50M	75M	75T	100M	100T	150M	150T	200M	200T
Play mode	Controlled by the filtration panel.								
Nominal speed	2850 RPM								
Security features	Automatic shutdown at high current and temperature.								
Filter basket volume	2.6 L								
connection	DN50 mm & DN63 mm (299 threaded inlet & outlet, 63/50mm connection fittings included)								
Place of use	Freshwater and saltwater 6 g/lt (6000 ppm) maximum								

TECHNICAL SPECIFICATIONS

FloProTM	50M	75M	75T	100M	100T	150M	150T	200M	200T
Pump type	Self-priming pool pump								
Engine type	Asynchronous motor, TEFC*, Class F insulation.								
Yield	> 80% (IE3 standard1)								
Power of C1k1 HP (P2)	0.5	0.75		1		1.5		2	
Power C1k1 Kw (P2)	0.37	0.55		0.75		1		1.5	
Maximum amperage (A)	3.5		1.2	4.2	1.6	6	3.2	7.6	3.5
Power supply 50 Hz	Single-phase		Three-phase	Single-phase	Three-phase	Single-phase	Three-phase	Single-phase	Three-phase
Flow rate at 10 mSS (m3/h)	10.3 m3/h	13.2 m3/h		15.8 m3/h		20.8 m3/h		27 m3/h	
Maximum flow rate (m3/h)	16.8 m3/h	18.6 m3/h		22.9 m3/h		27.4 m3/h		35.5 m^3/h	
Maximum head height (m)	17.8 m	20.7 m		21.5 m		22.3 m		24.5 m	
Maximum water temperature 1	35 °C								
Protection class 1	IPX5								

* TEFC = Completely Enclosed Fan Cooling

THREE DIFFERENT SOLUTIONS IN ONE PRODUCT.

I'M COMMENTING ON THE POOL ER1_1M 1ST1YORUM

Pump model	Remote control
FloPro™VS AUT	eXO®iQ Series Hydroxinator®iQ
WP000079	
LFS	

I'M COMMENTING ON THE PUMP ER1_1M

Pump model	Remote control
FloPro™VS AUT	iQPUMP
WP000079	WA000017
LFS	LFS

I'M JUST COMMENTING ON THE PUMP.

FloPro™ETC
WP000003
LFS

PERFORMANCE

"Performance curves at different speeds.

"Manometric pressure <pump print
The height is specified as i = meters and the water column as mss.
1 bar = 10.19 m.

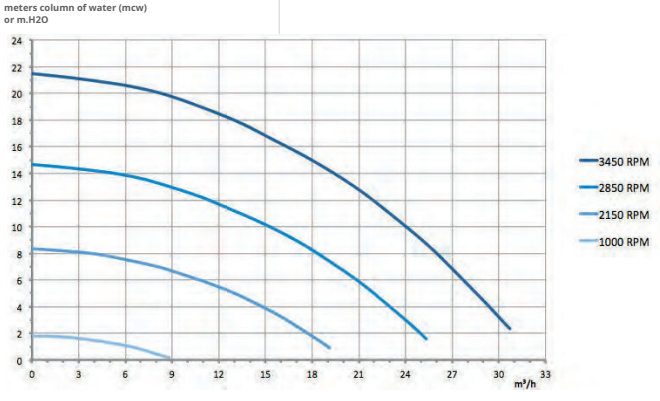

DIMENSIONS AND WEIGHT

Model	FloPro™ETC	FloPro™VS AUT
Length	59.8 cm	
Height	32.4 cm (excluding pump base)	
Width	25.4 cm	
A 1rl1k	17 kg	

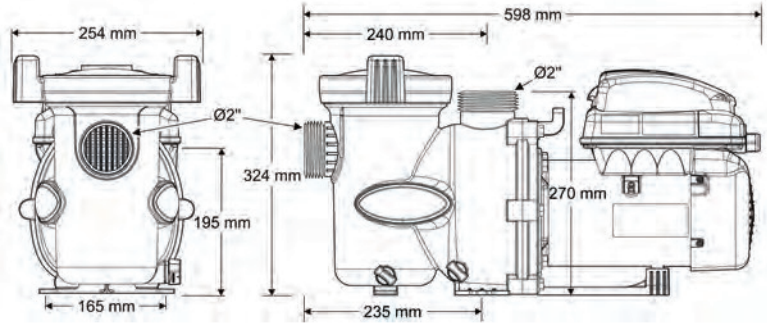

PERFORMANCE

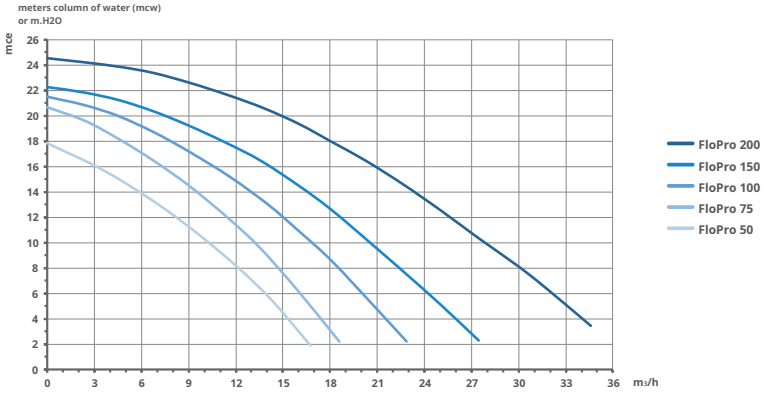

DIMENSIONS AND WEIGHT

FloPro™	50M	75M	75T	100M	100T	150M	150T	200M	200T
Length (A)	58.3 cm		54.3 cm	58.3 cm	55.3 cm	58.3 cm	56.8 cm	58.3 cm	
Height	32.4 cm (excluding pump base)								
Width	25.4 cm								
A 1rl1k	16 kg	17 kg			18 kg	19 kg	20 kg	21 kg	

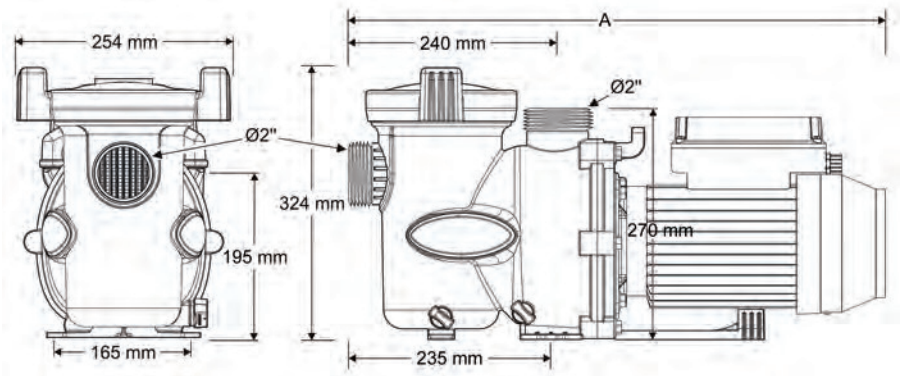

ASSEMBLY

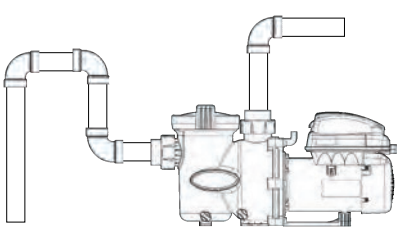

Wrong 1_: Air intake and wrong 1_ pre-filter
risk of overfilling.

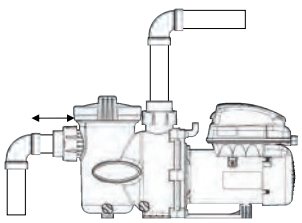

Wrong 1: The Emi line is too short.
risk of cavitation.

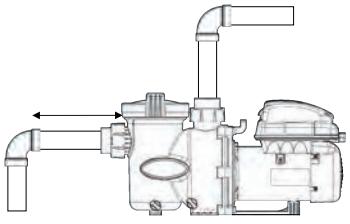

Do ru : Do ru emi_ hatt1 length = 4 x pipe diameter1 (20cm for D 50mm) (and 25cm for D 63mm)

iQPUMP

+ Remote control from anywhere, anytime.
+ Easy configuration
+ Maximum energy efficiency.

3 YEAR GUARANTEE

EASY SETUP

NATURE FRIEND

iAquaLink® CONTROL

Wall mounting kit

PRODUCT CODE & UNIT PRICE

Model	iQPUMP
Standard Model	WA000017
	340.00 Euros

EXPLANATION

Model	iQPUMP
User1 interface	Fast control interface via buttons and LEDs.
Mobile User Interface	The free iAquaLink# app is available on Android# and Apple® smartphones and tablets.
Play mode	Remote control via Wi-Fi connection1s1 using the iAquaLink™ app1 or manual control via the device.
Compatible devices	FloPro# VS AUT (on specific models) FloPro# VS pump (on all models)

TECHNICAL SPECIFICATIONS

Model	iQPUMP
Protection class 1	IPX4
Power supply	FloProTM VS (RS485 cable included) pump connection
Wi-Fi connection1s1	Wi-Fi 802.11b/g/n/ac *
Wi-Fi coverage area1	Up to 150 m **
RS485 cable length	4.3 m
Size (uxyxg)	13.7 x 31.0 x 3.2 cm

* : Depending on the situation, you may need to select Wi-Fi band 1 from the modem settings menu.
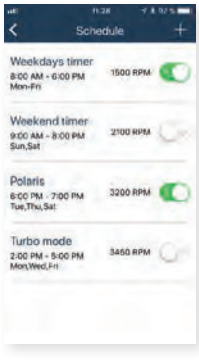
** : Maximum mecapable in an unobstructed (walls, metal objects, etc.) open area. In some cases, the use of a Wi-Fi range extender or Wi-Fi hotspot may be required.